## Front

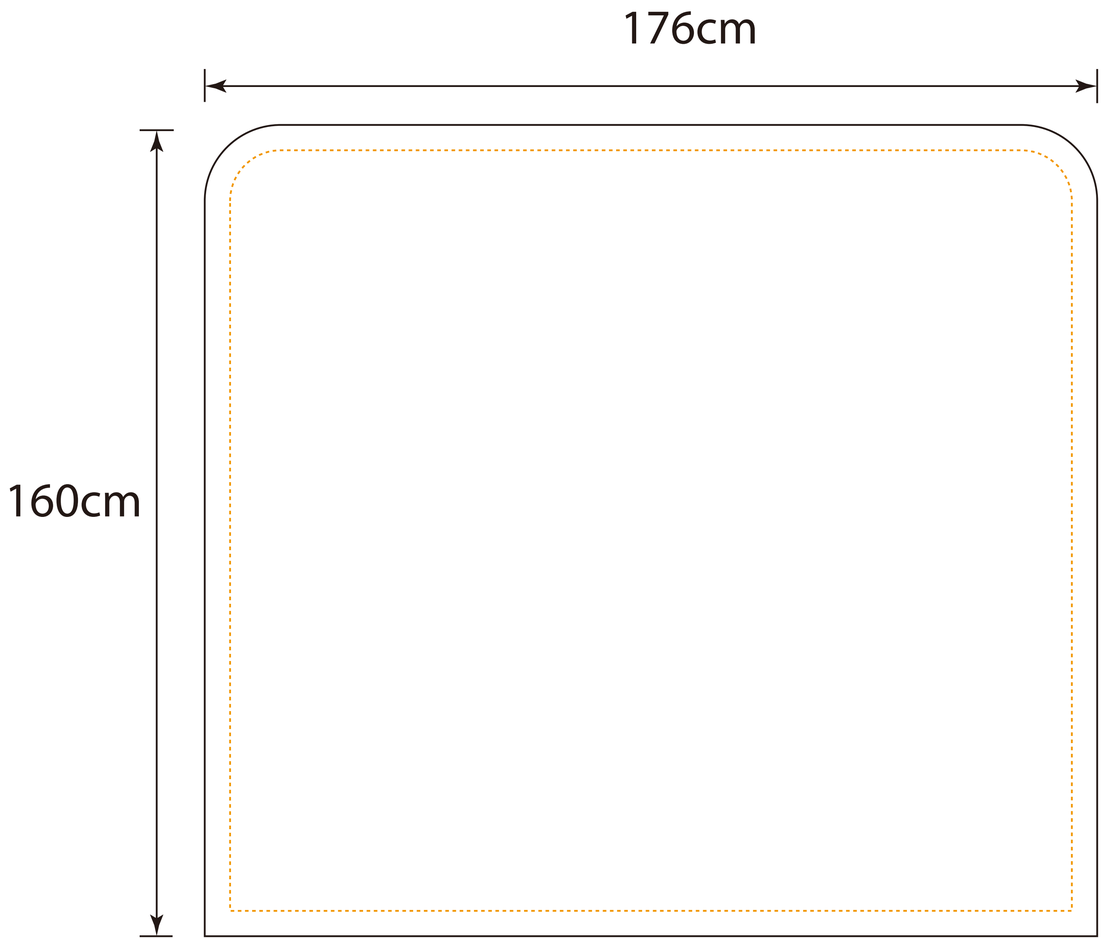

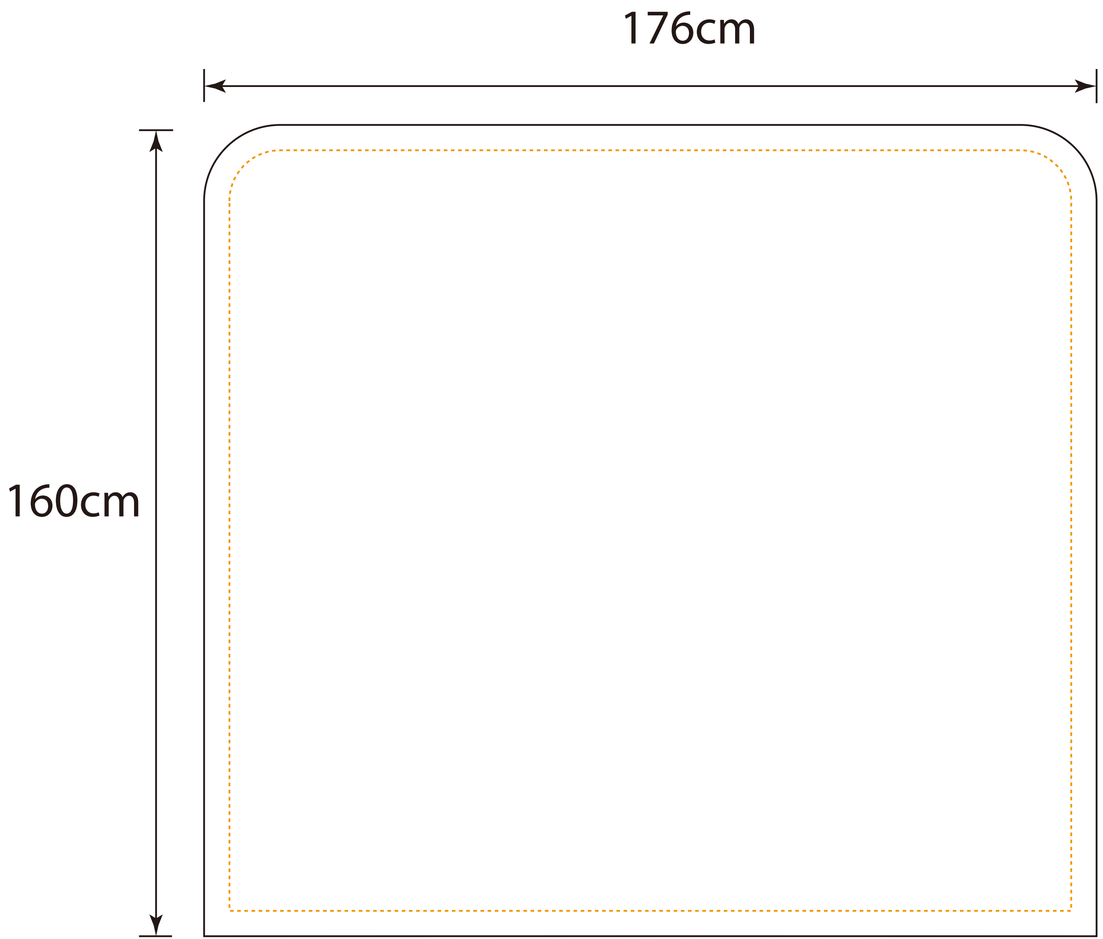
## Back