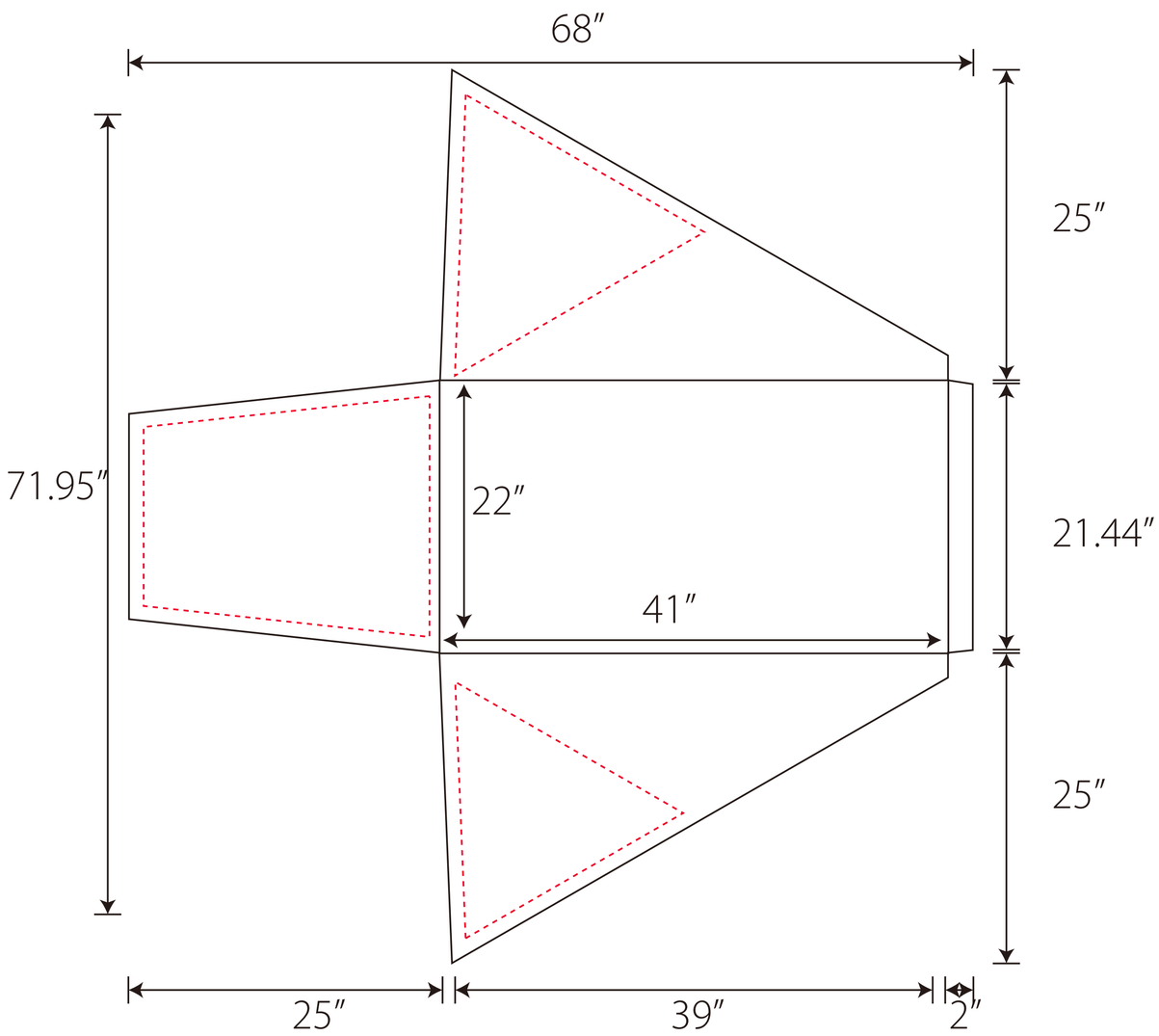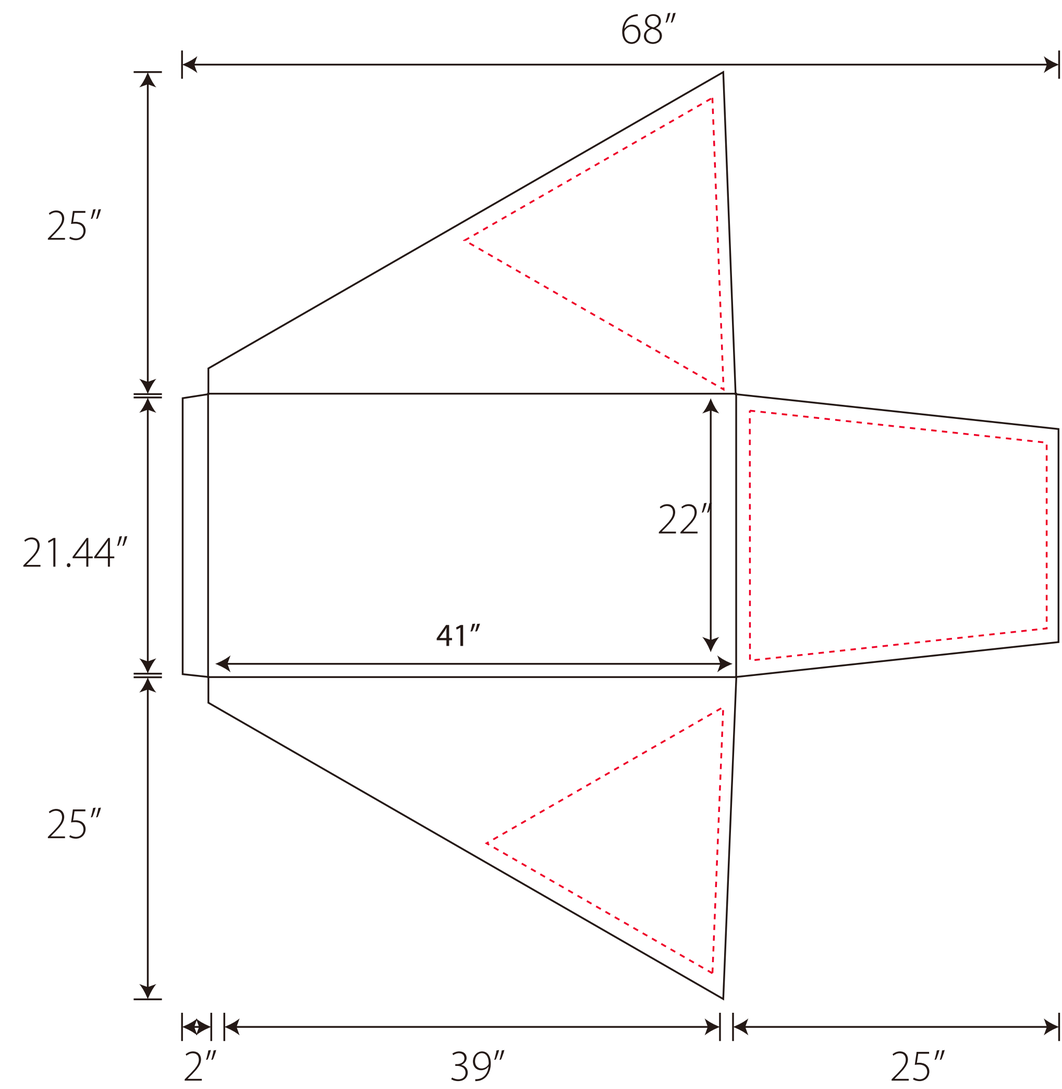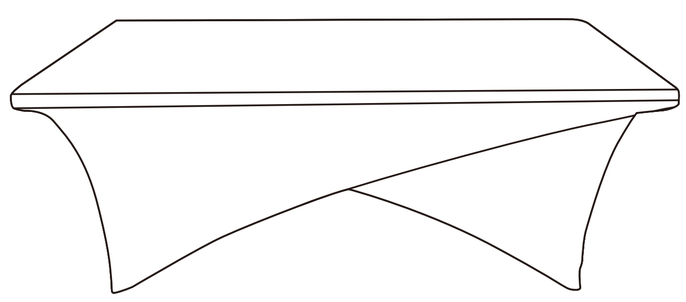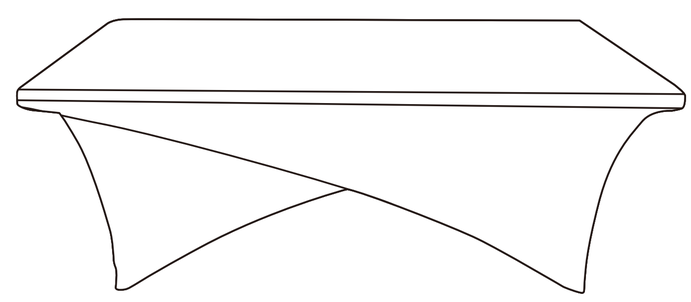TCSCR-4FT-240G