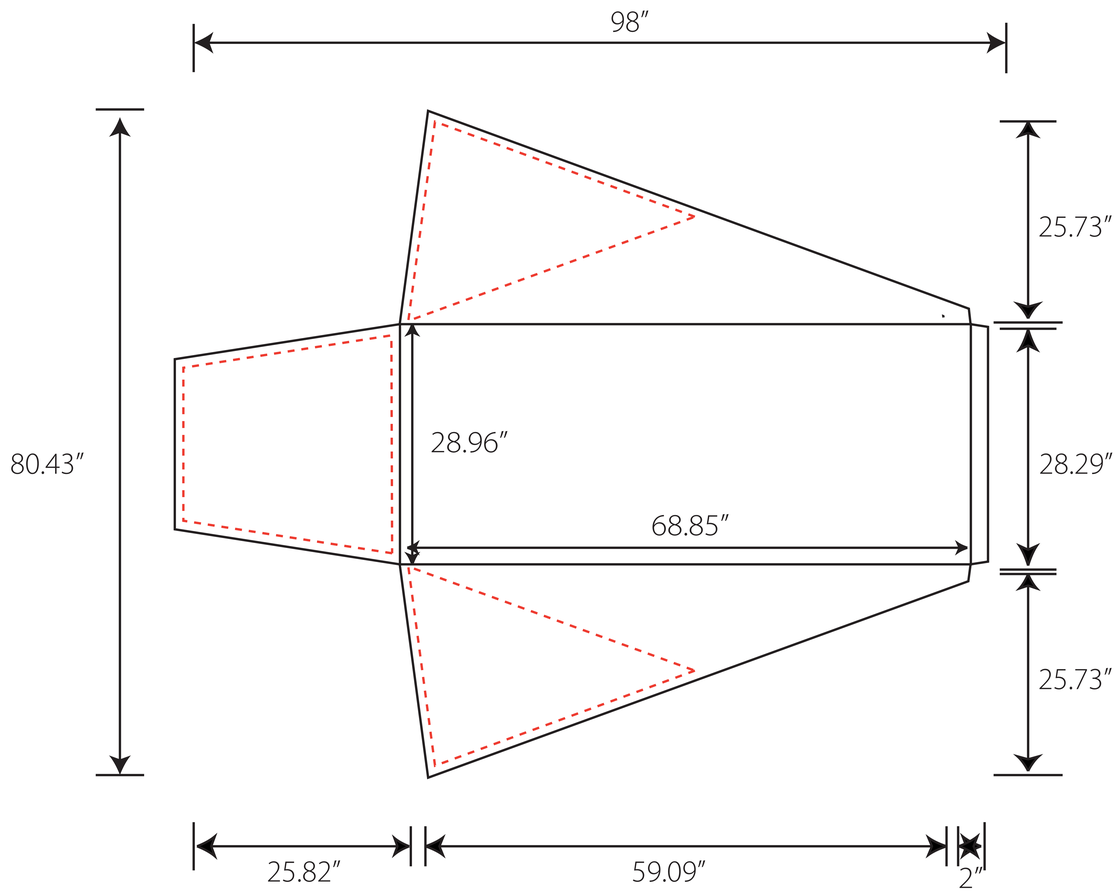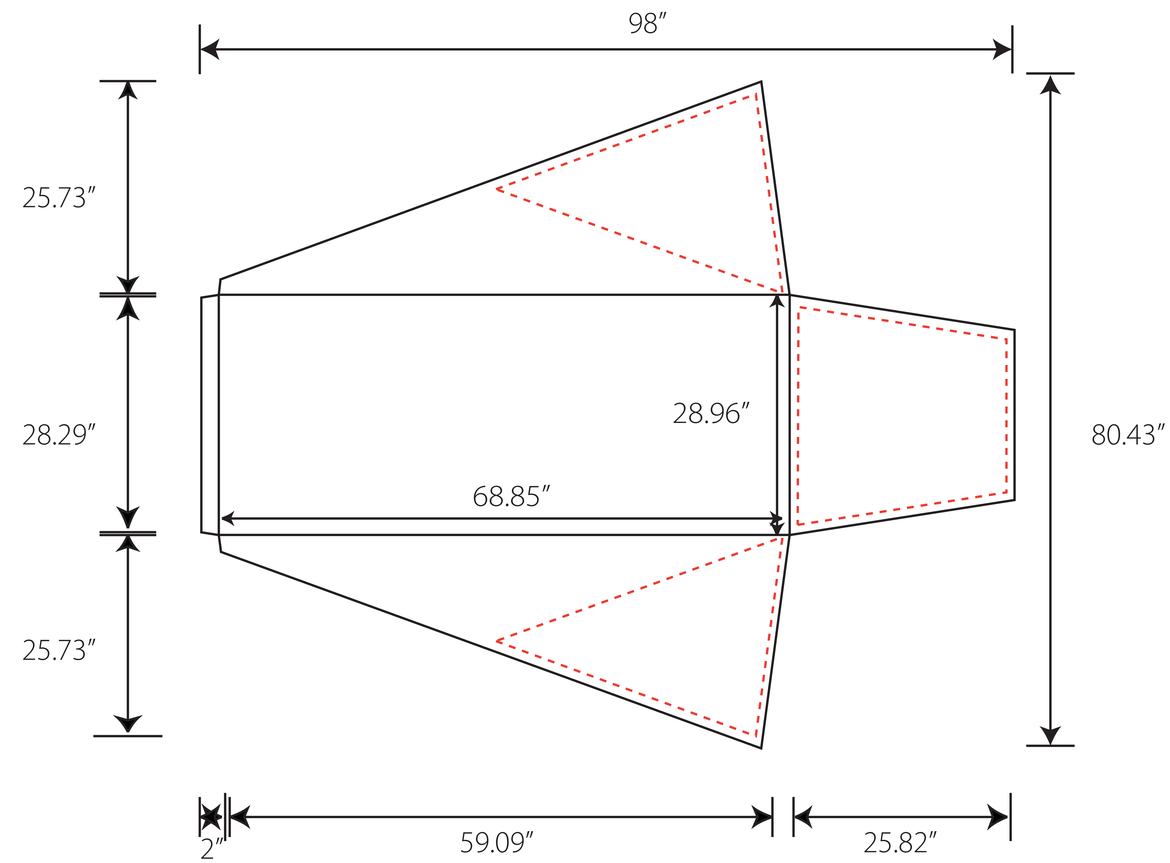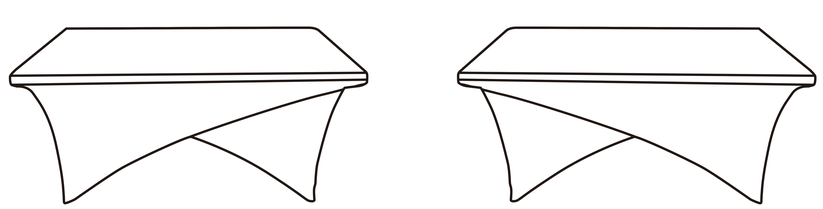TCSCR-6FT-240G