3m x3m

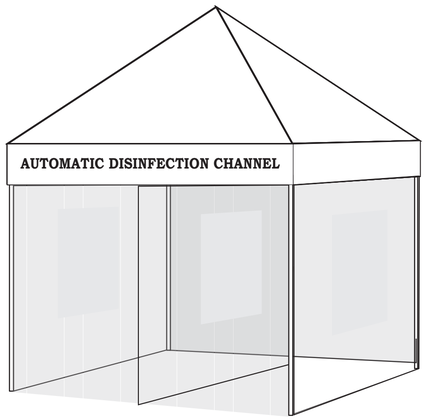

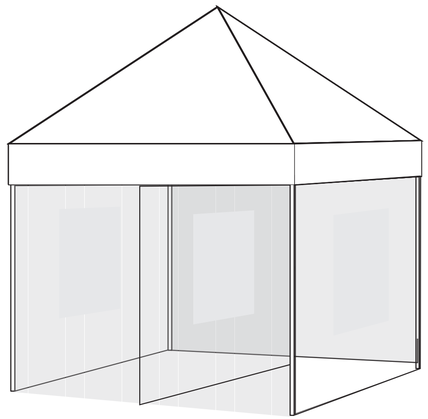

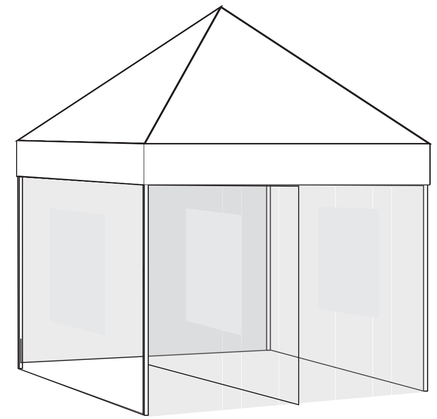

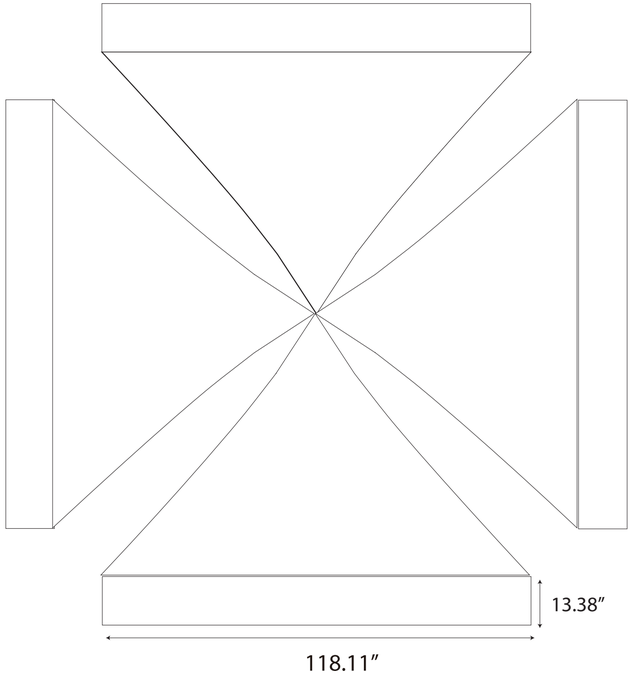

Full Wall

Full Wall

Full Wall

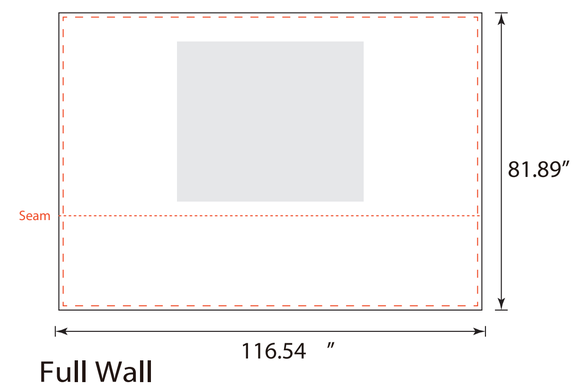
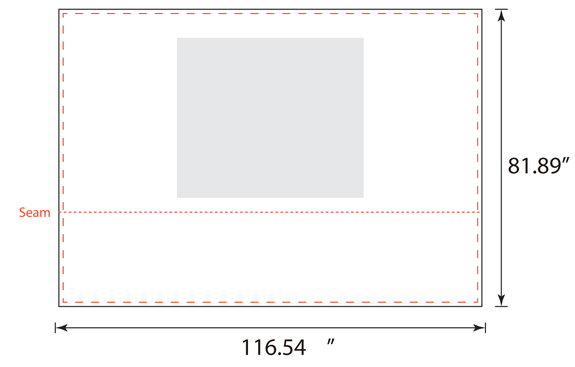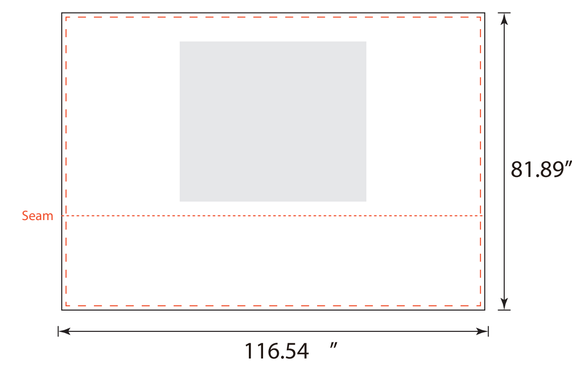
Full Wall