L

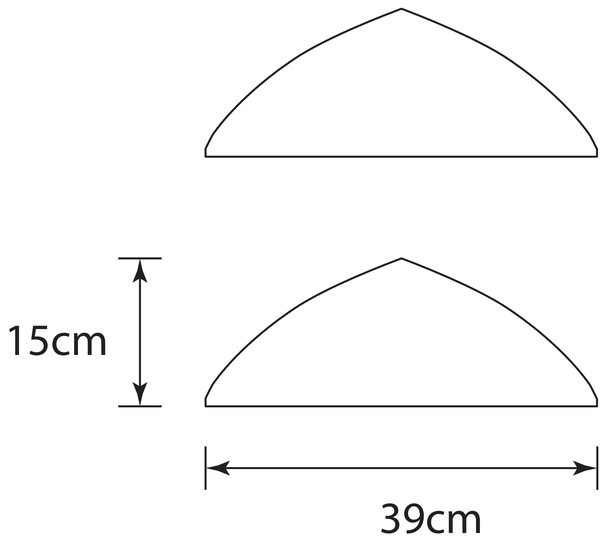

Front

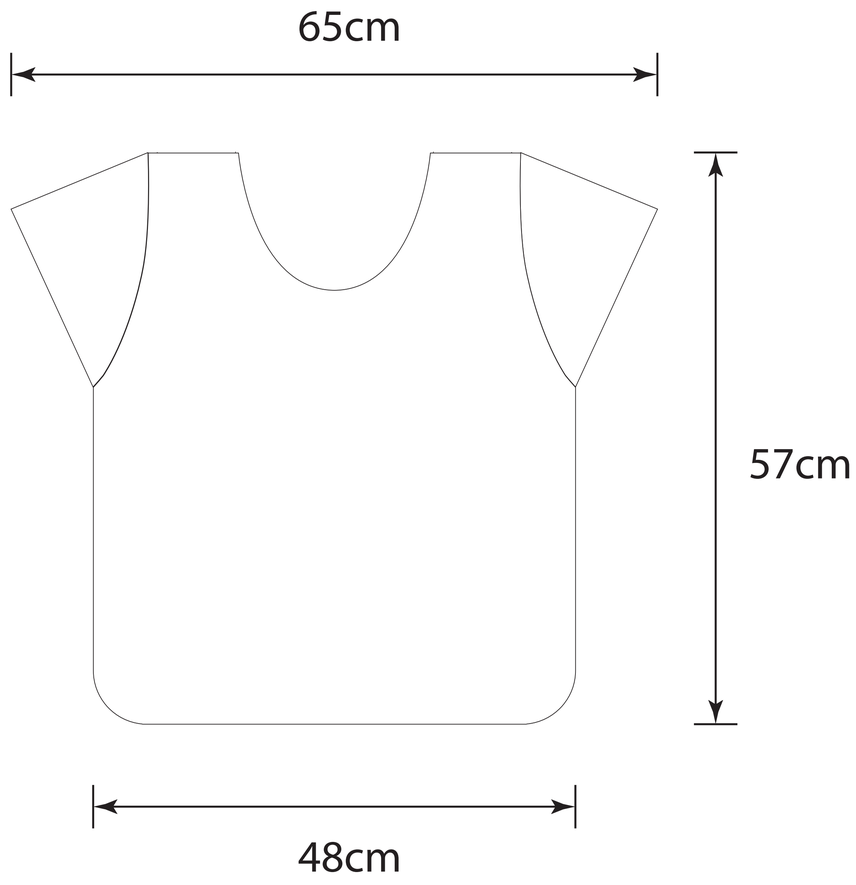

Back