S

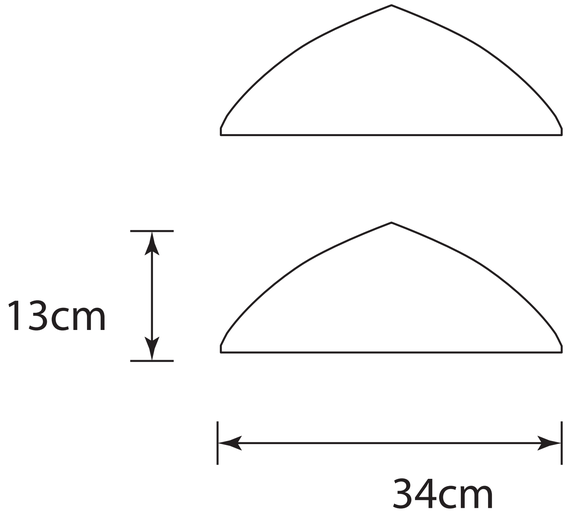

Front

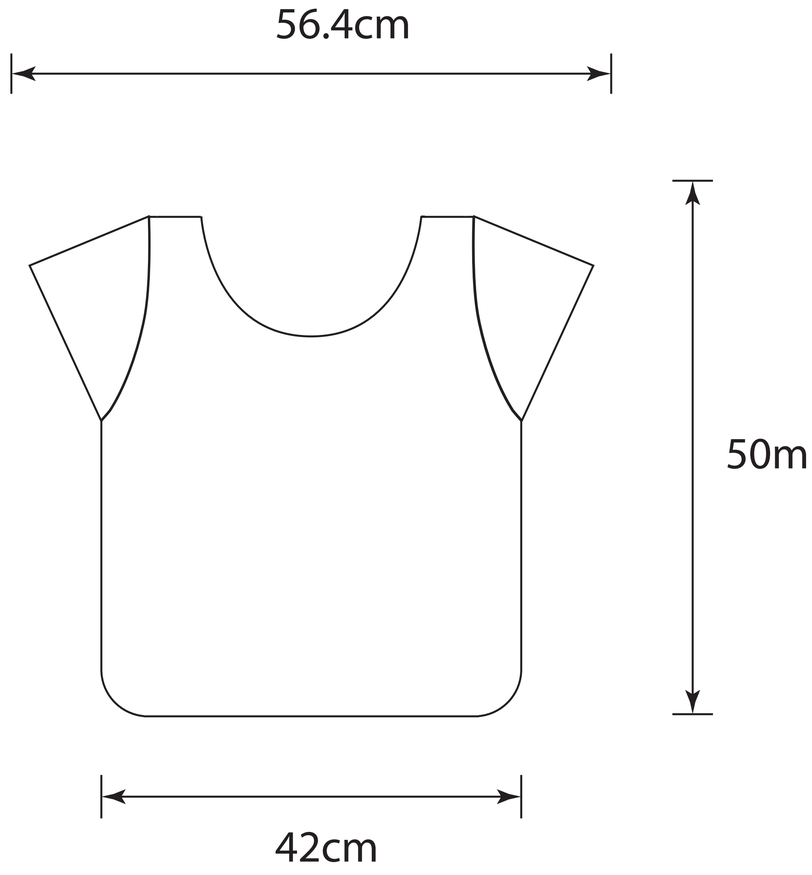
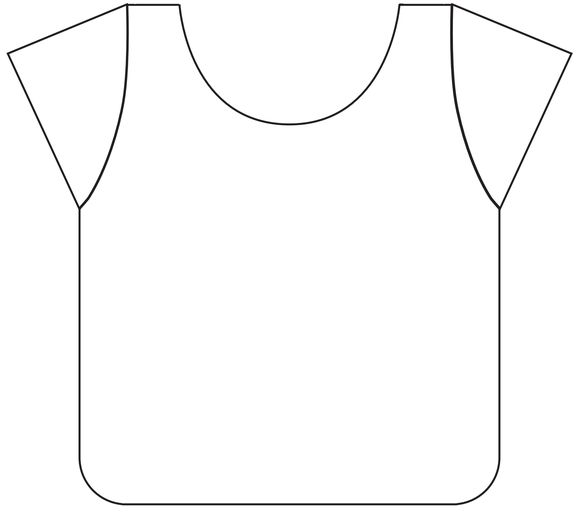
Back