XL

Mat front

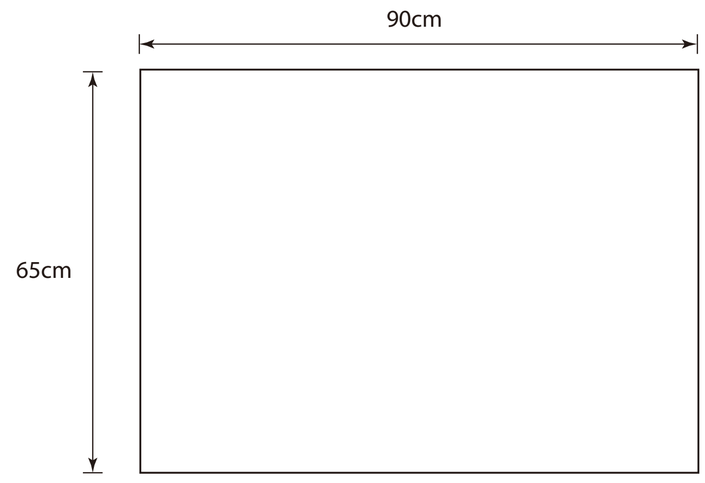

Mat Back

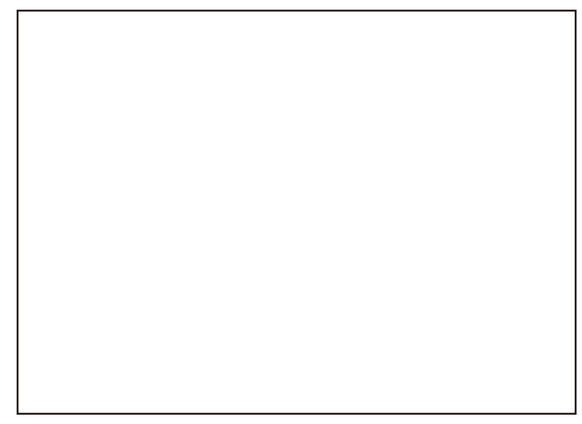

The package of edge

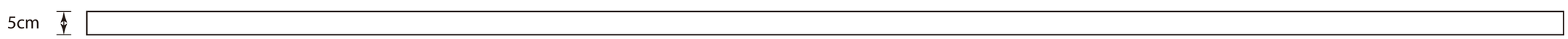

Inside

Outside

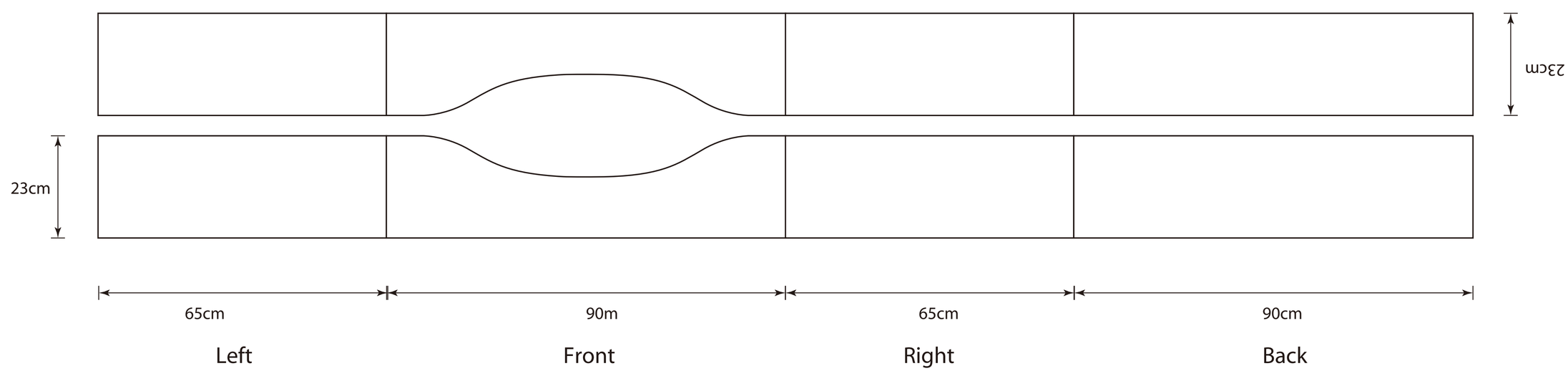
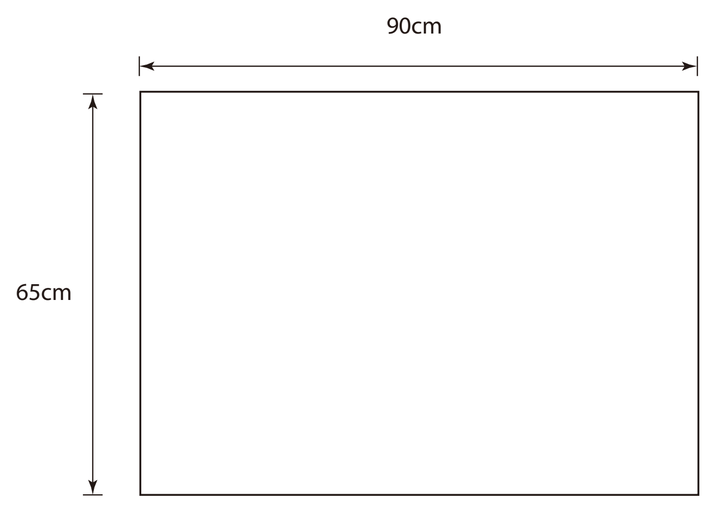
Bottom