M

Mat front

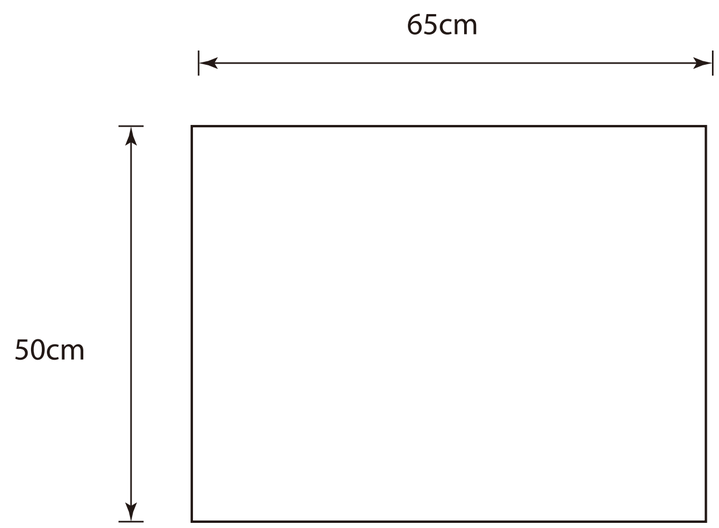

Mat Back

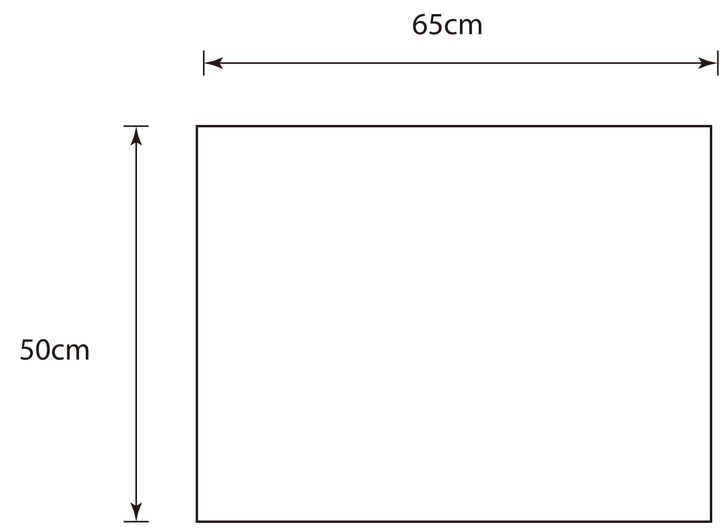

The package of edge

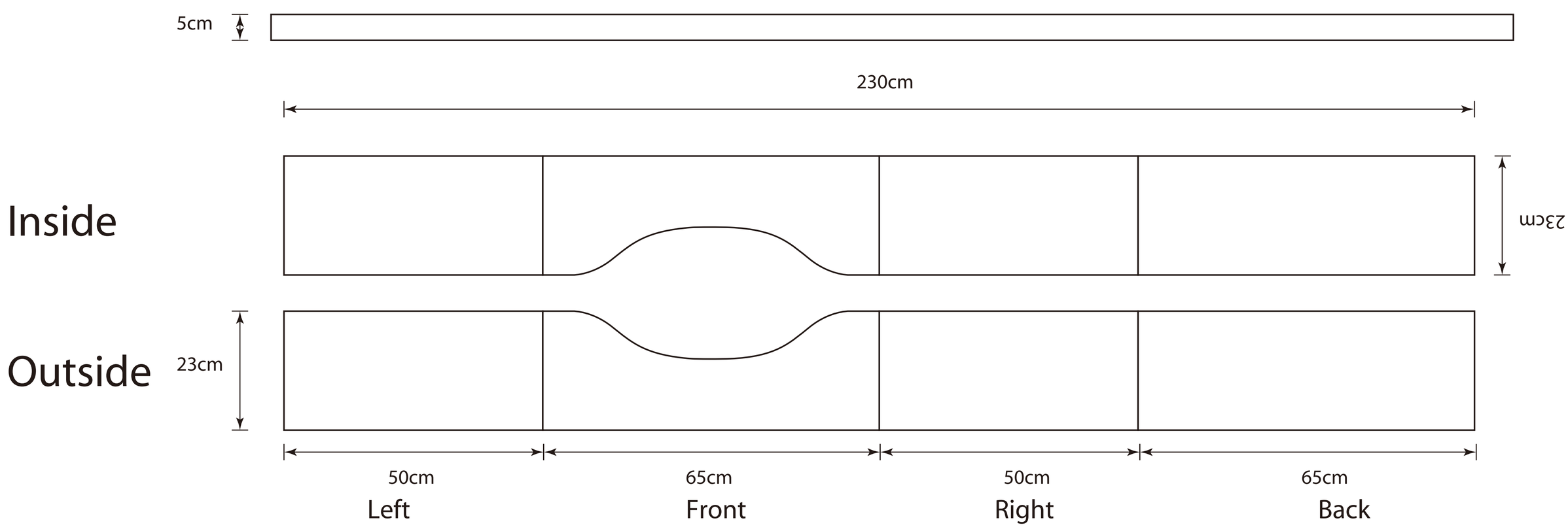
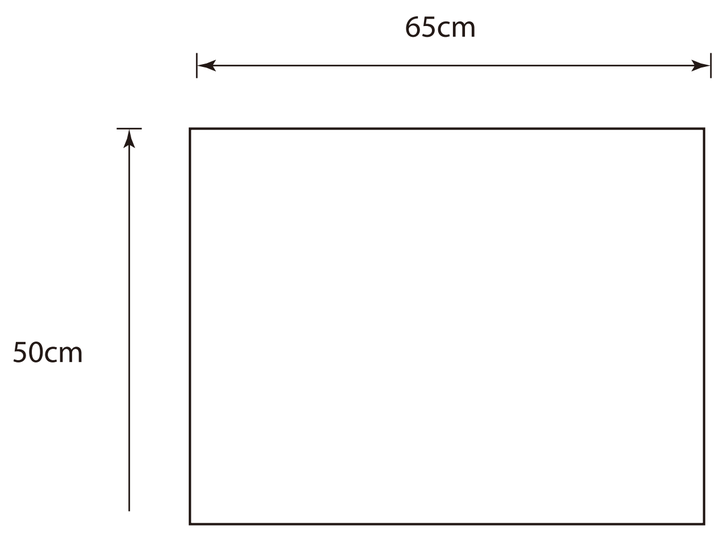
Bottom