XL

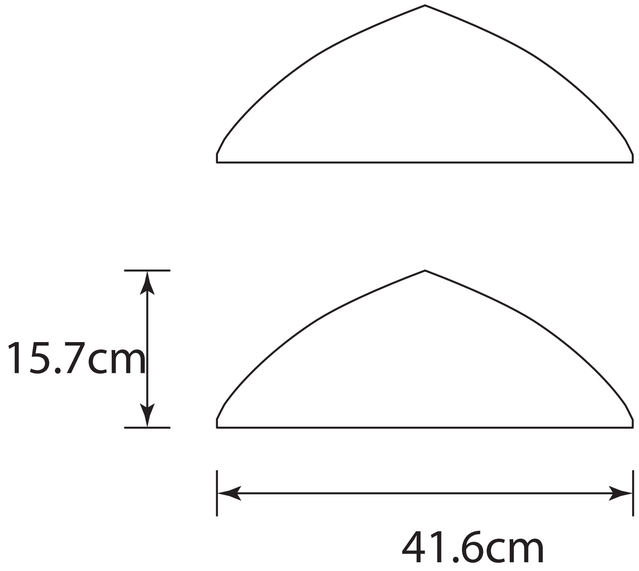

Front

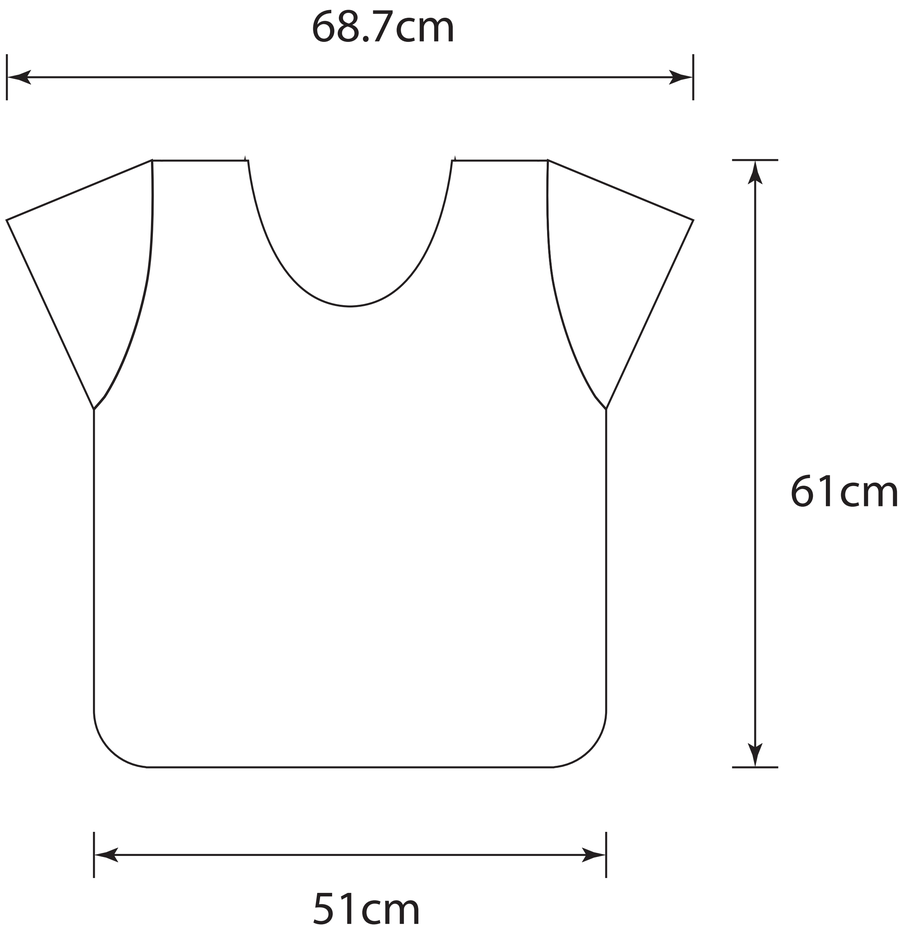
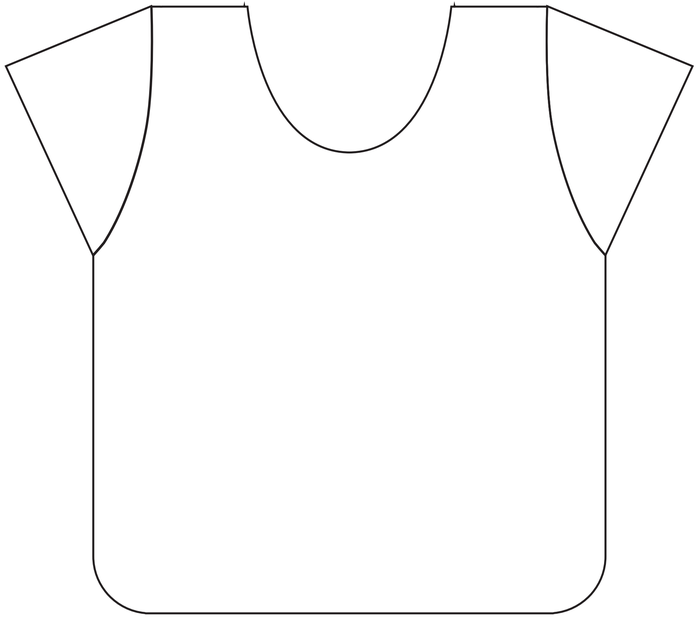
Back