26.5”Dtop x 33”H x 22.5”Dbottom-180G
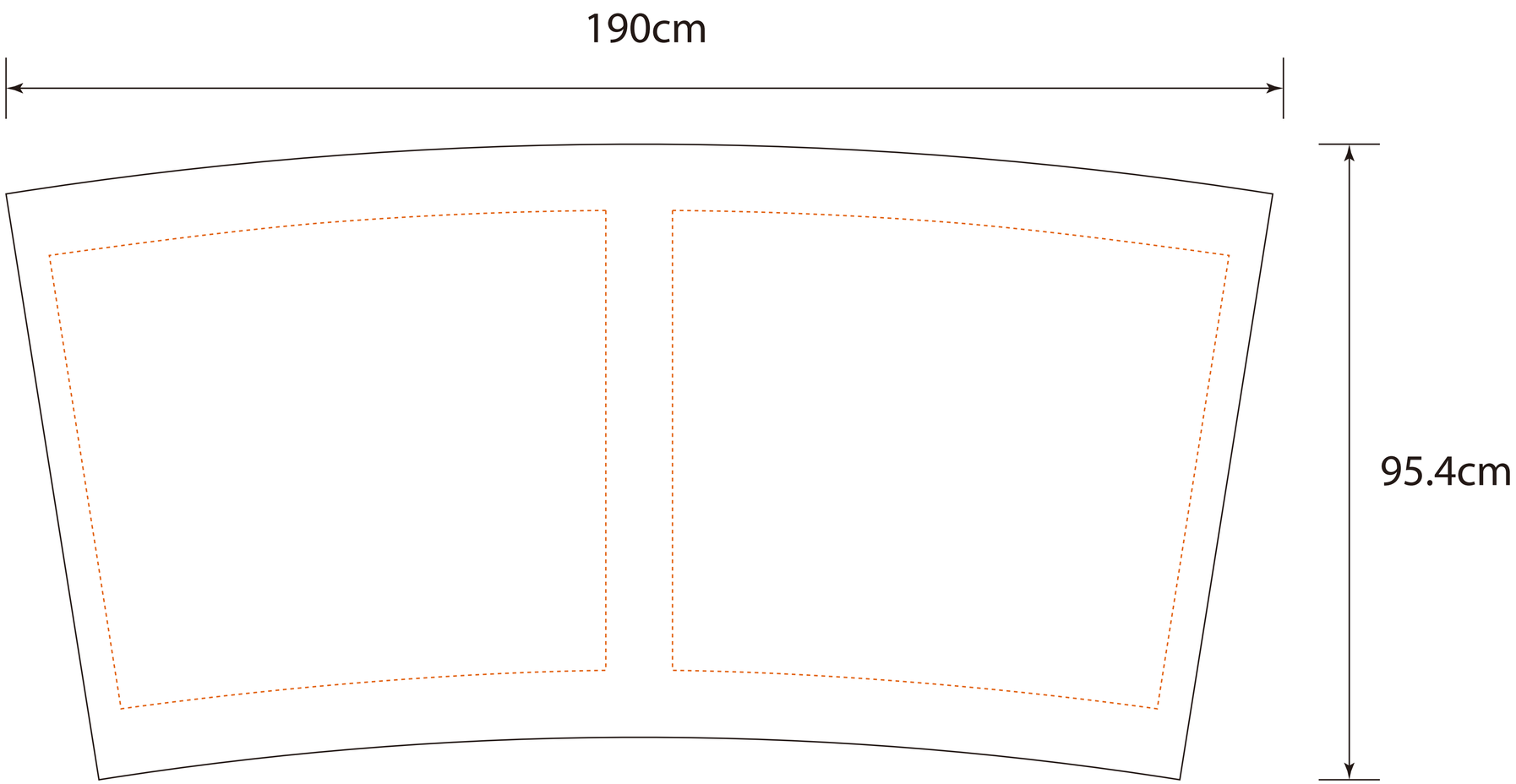
E