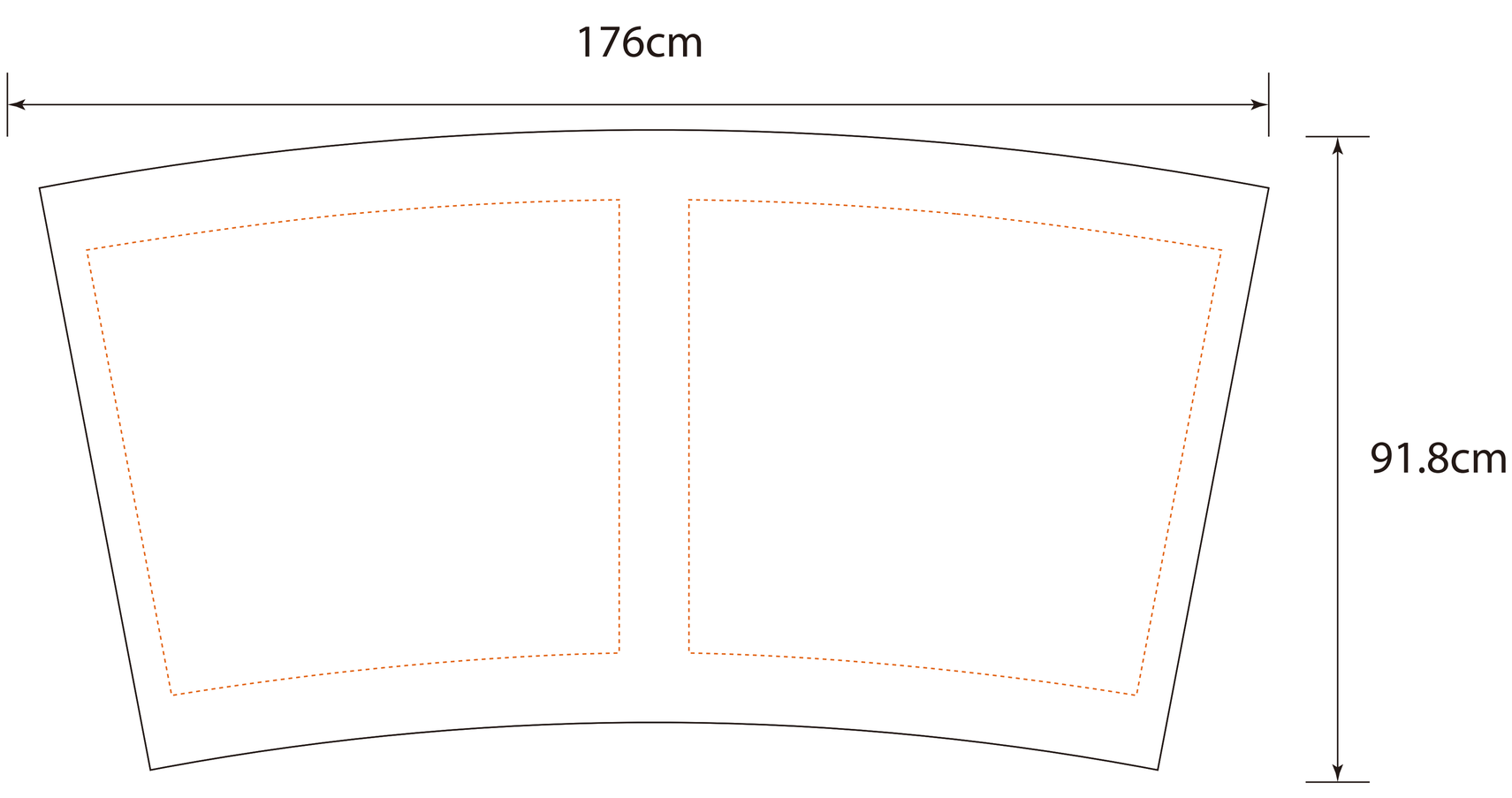24”Dtop x 31.5”H x 20”Dbottom-180G