15.625”Dtop x 17.125”H x 14”Dbottom-180G
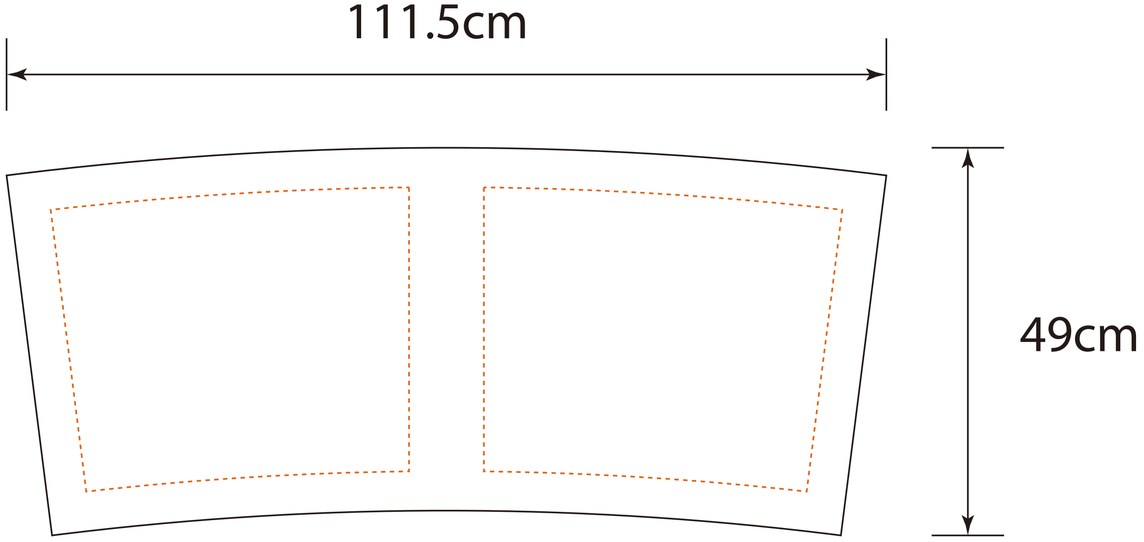
A