TCSBZ-S4

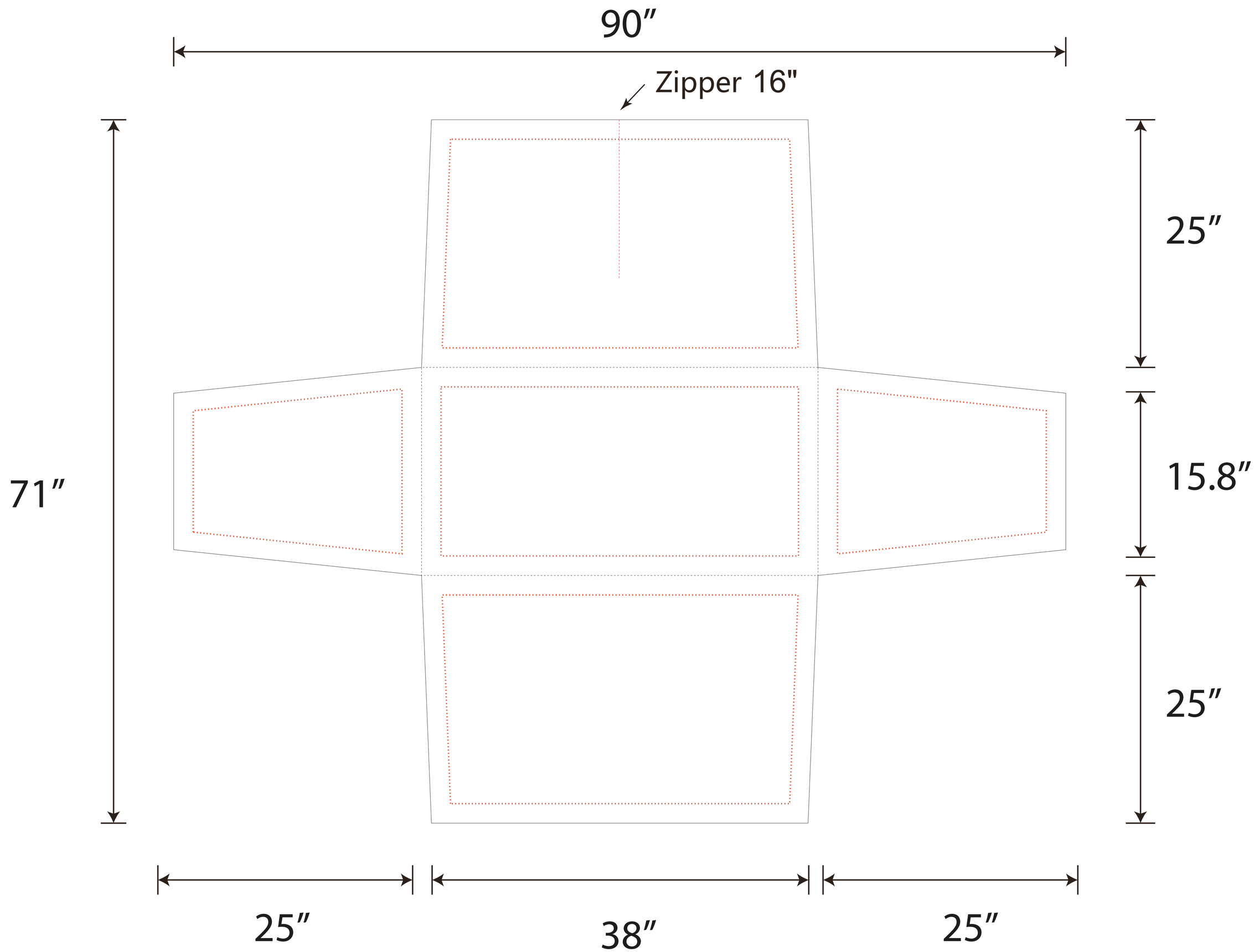

Tips: 1. Please put your main artwork inside the gray area
2. Please delete the layer before saving