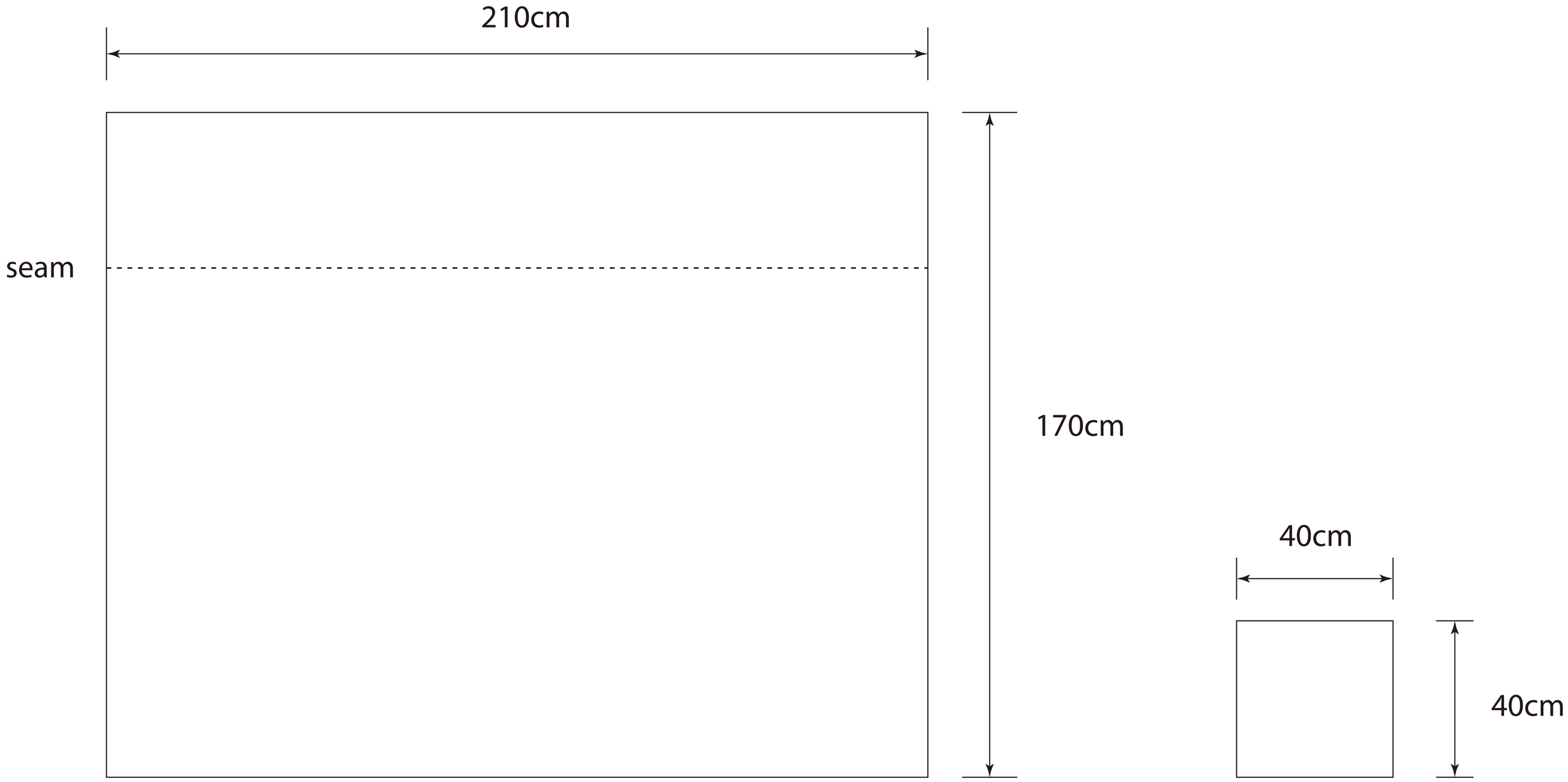
210cm
seam
170cm
40cm
40cm