240g

81x100-L
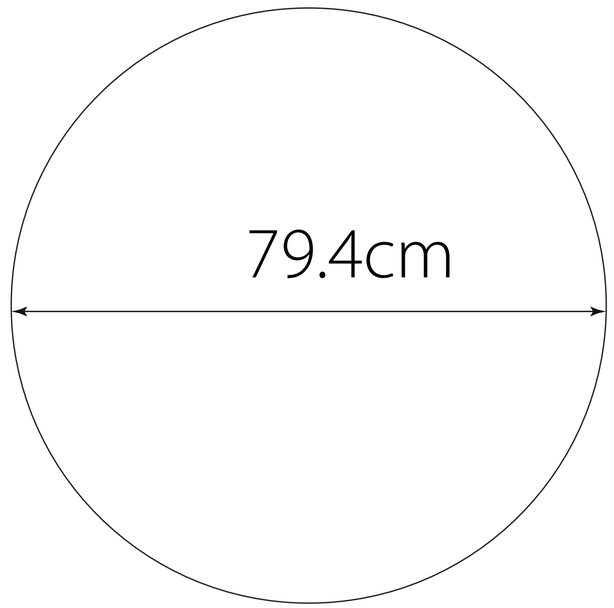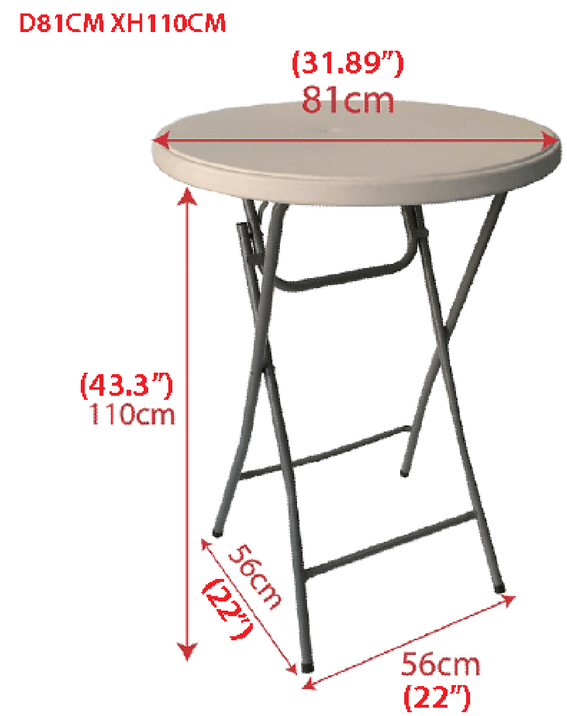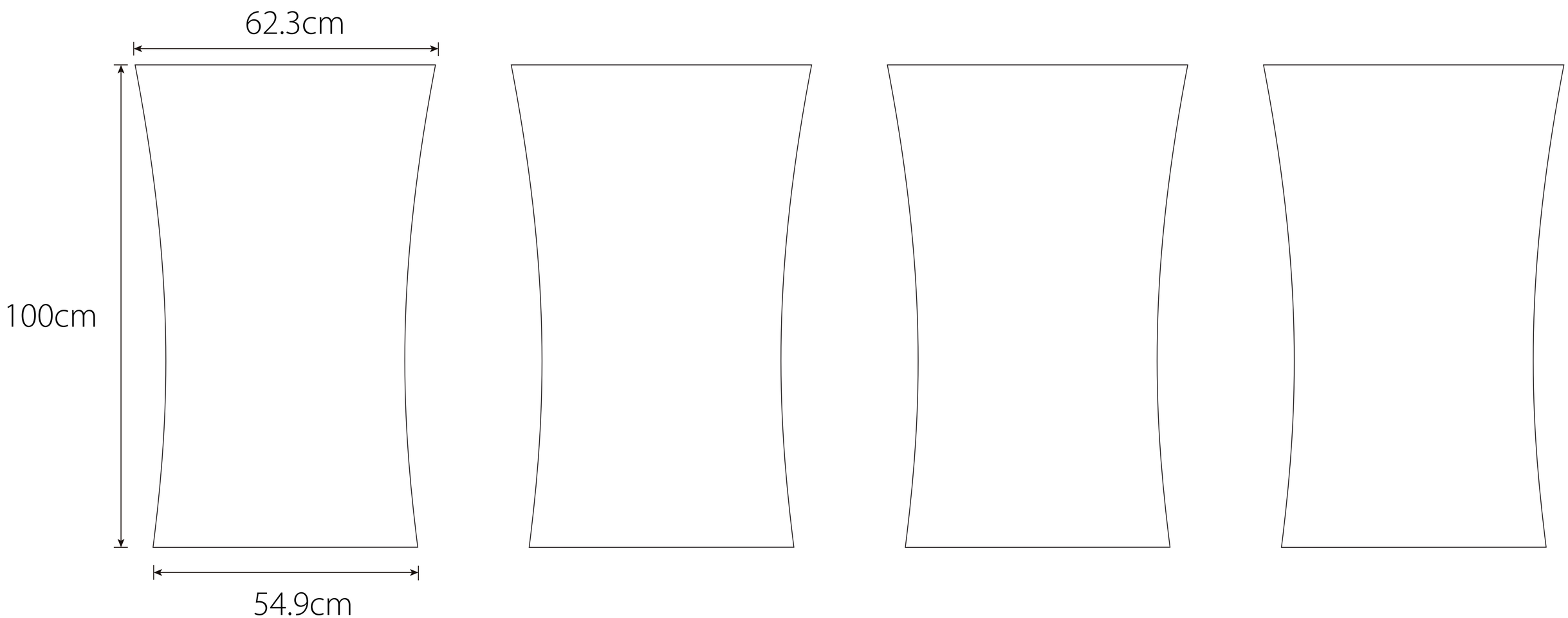
81x100+56x56cm