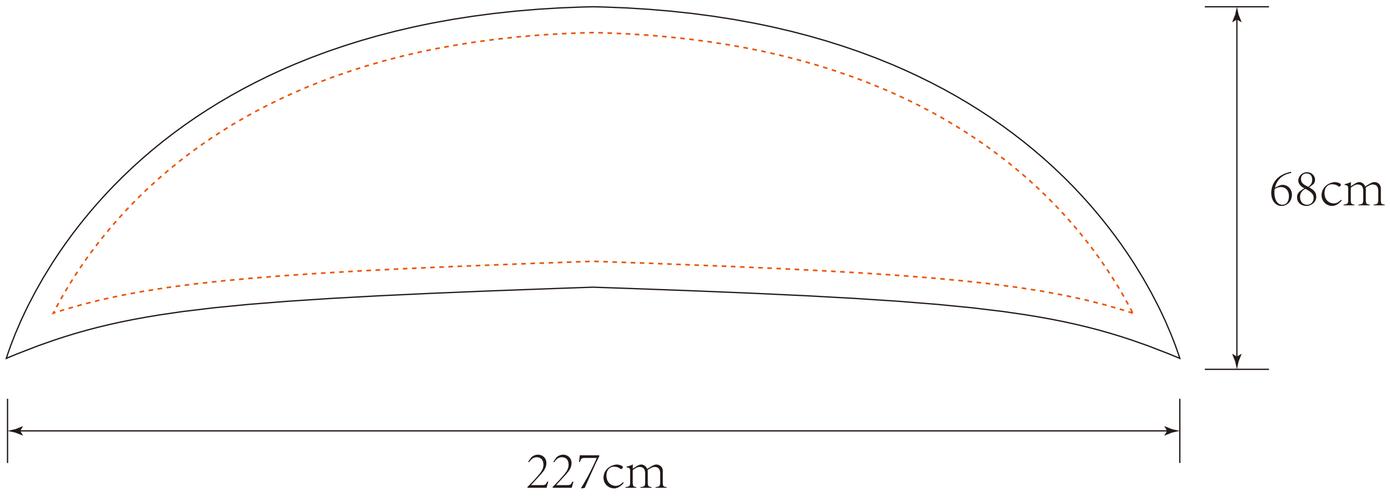

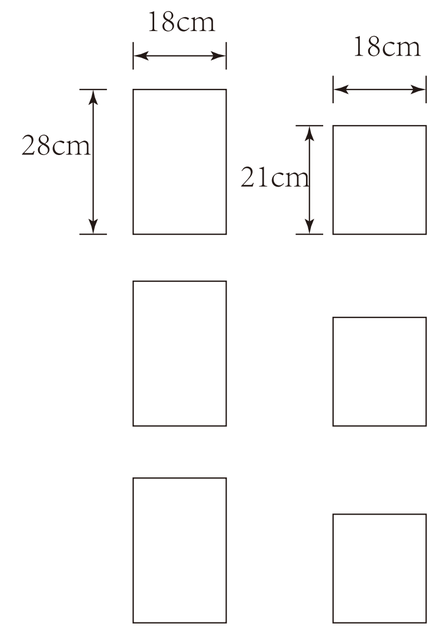

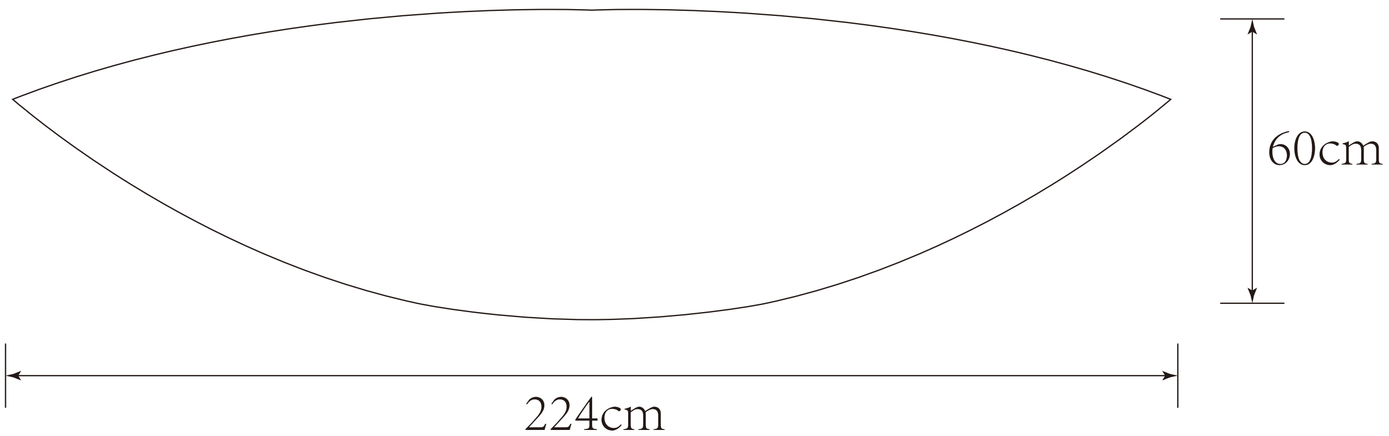

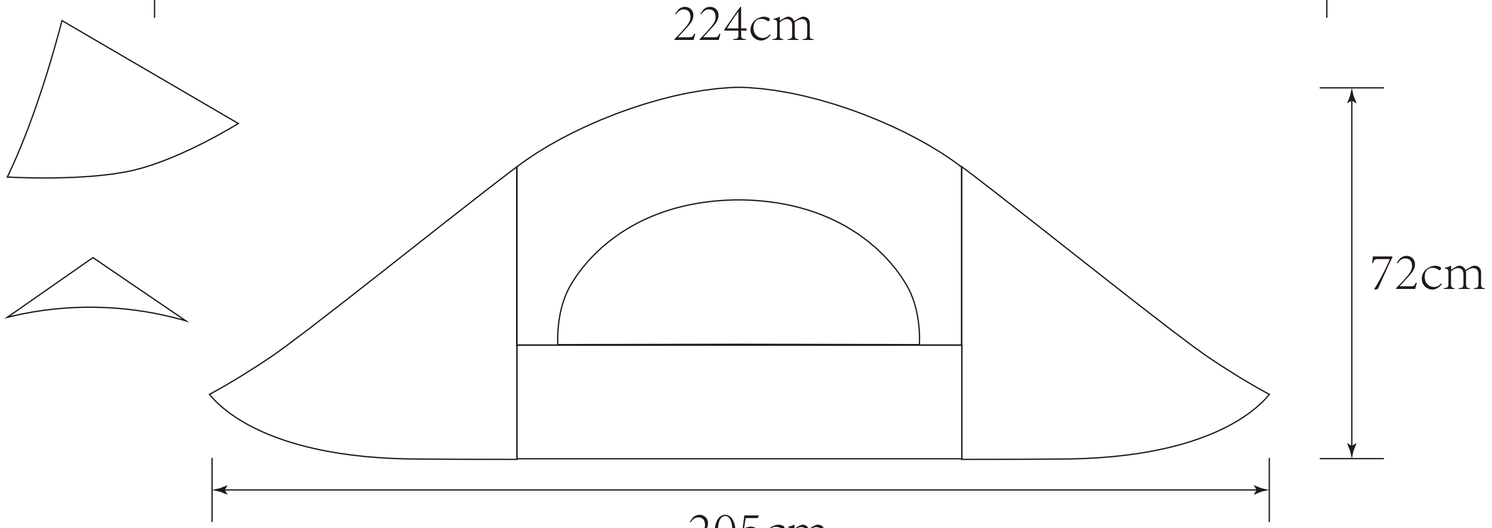

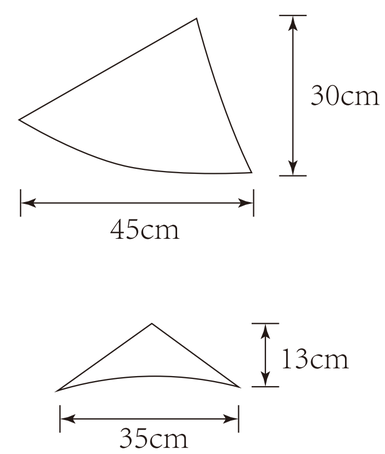

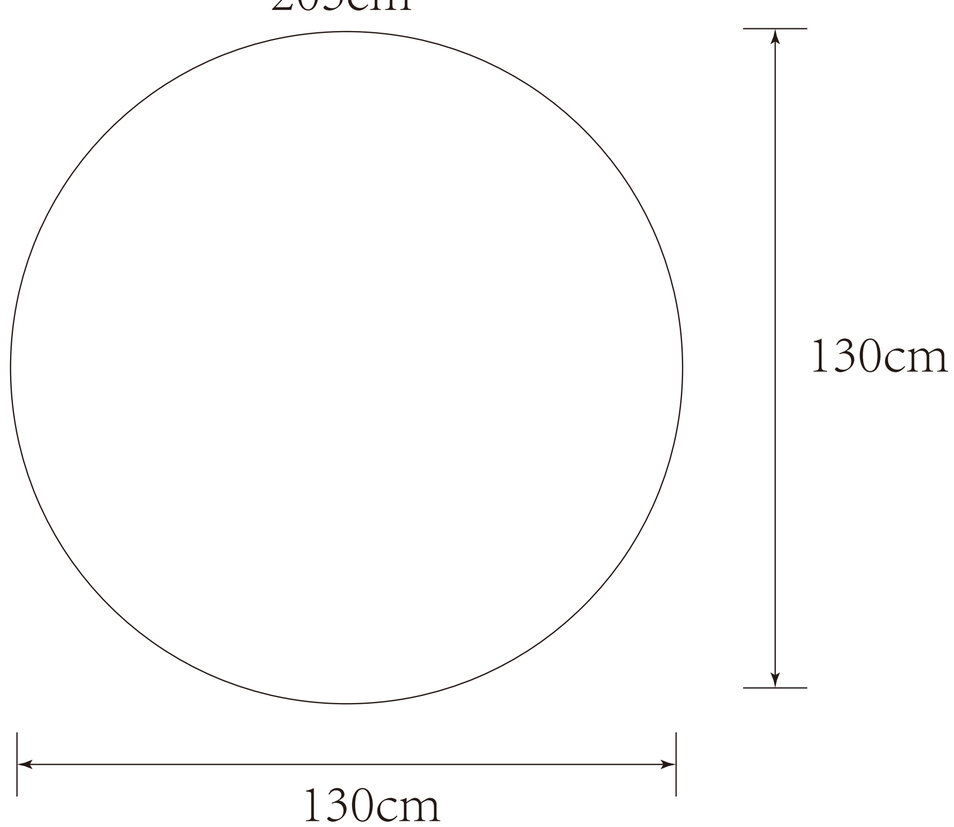

Carrying Pouch

Front

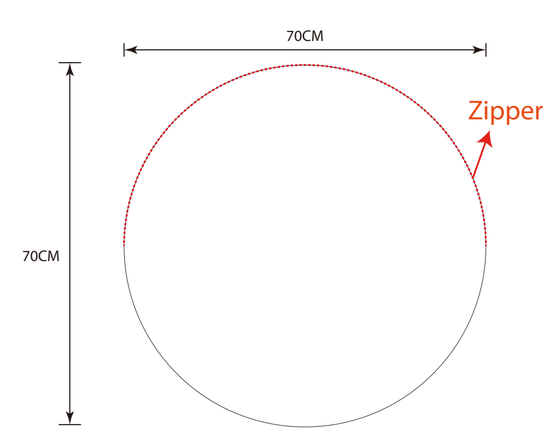
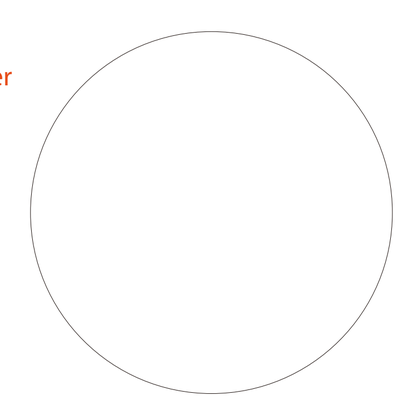
Back