S

Front

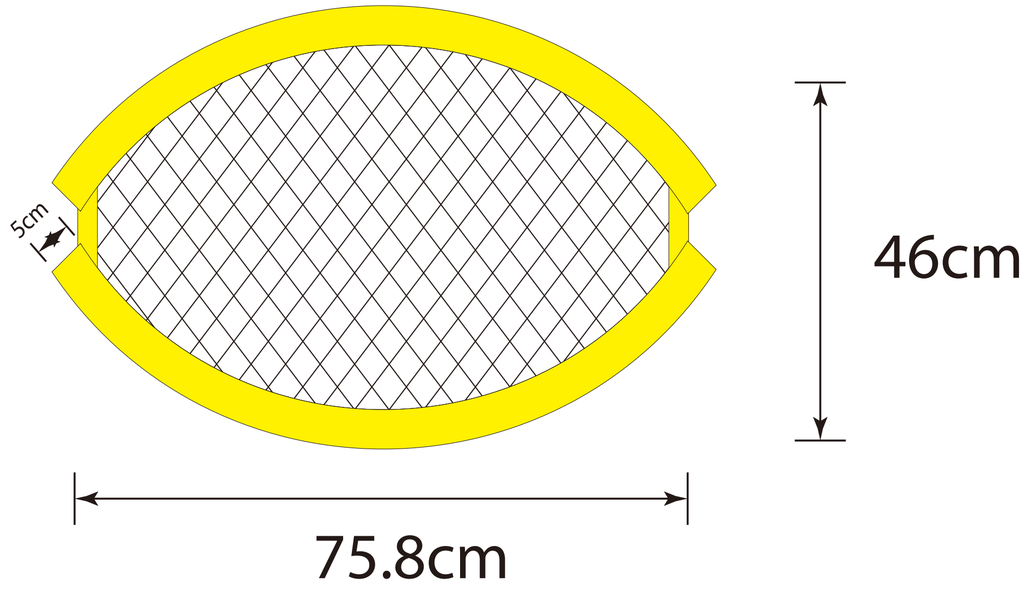

Back

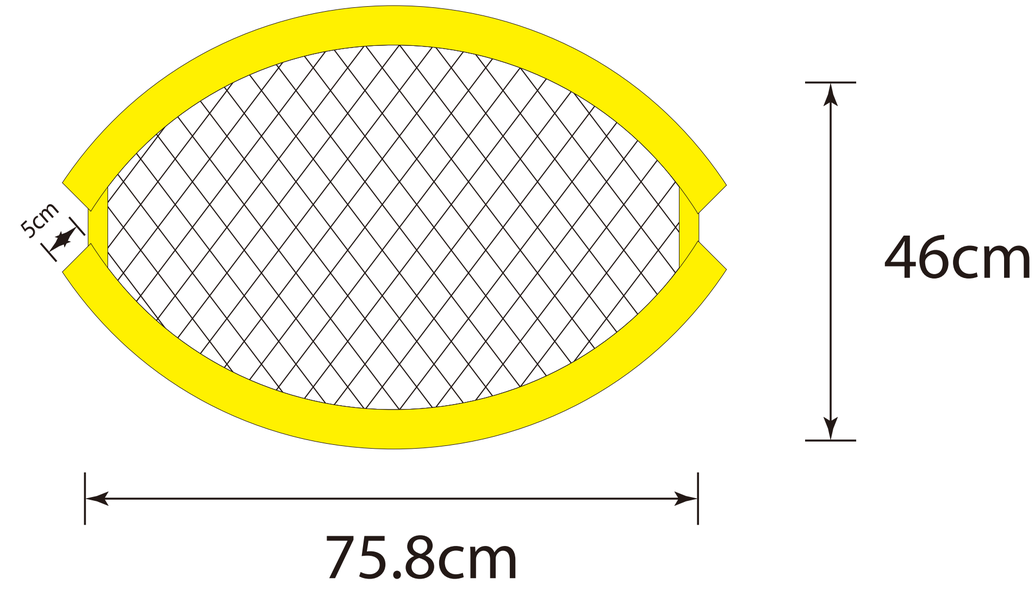

Front

Back

Carrying Pouch
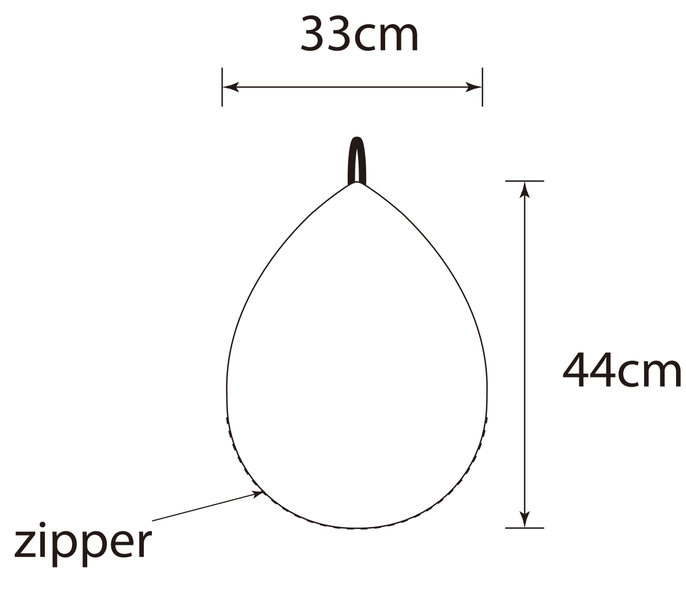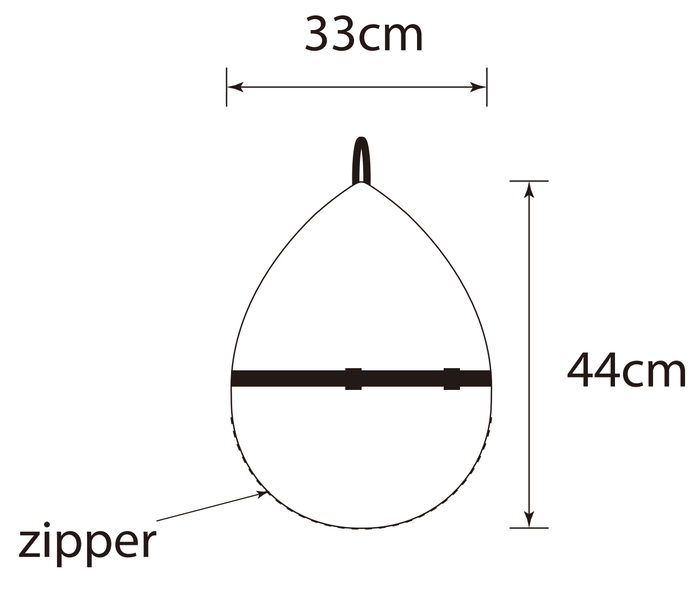
S