M

Front

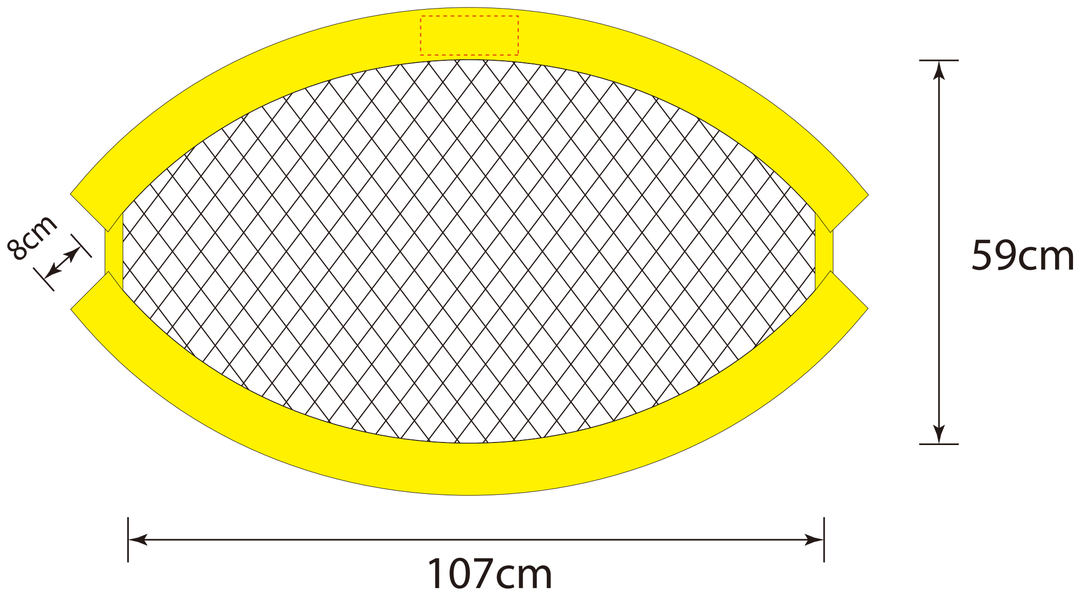

Back

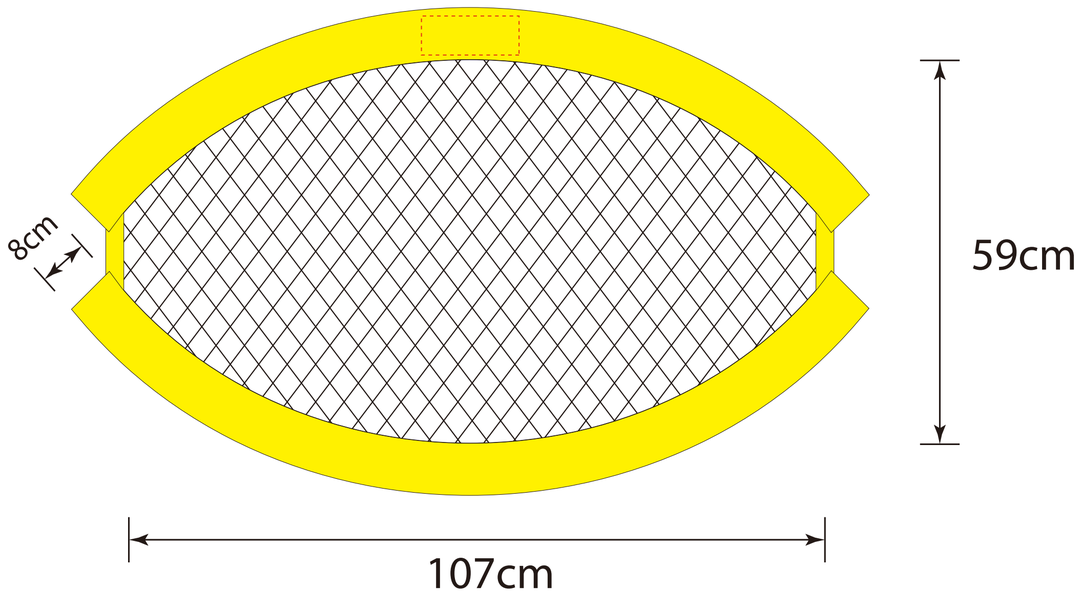

Carrying Pouch

M

Front

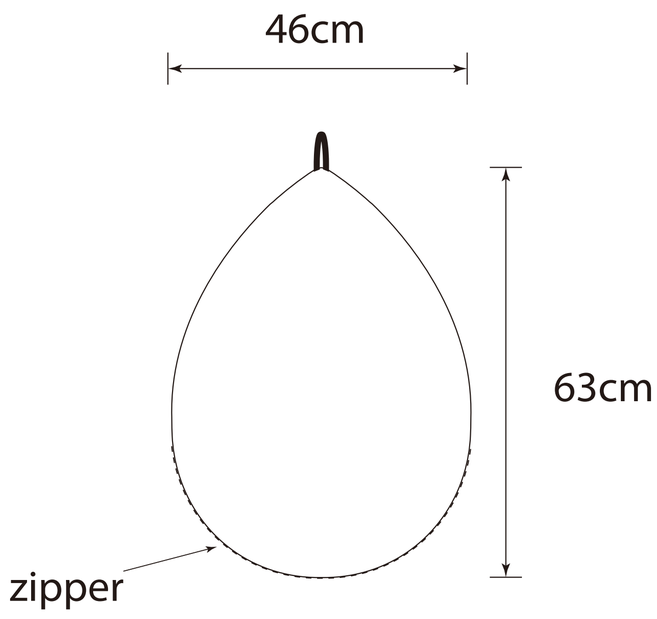
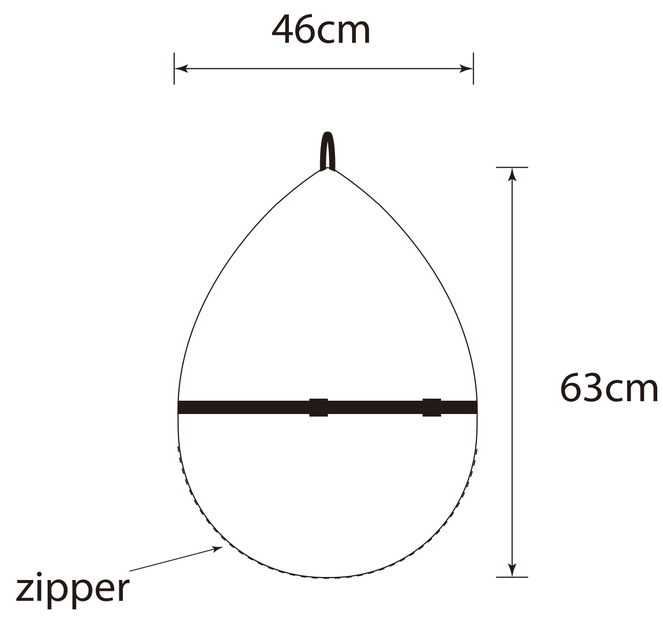
Back