Front

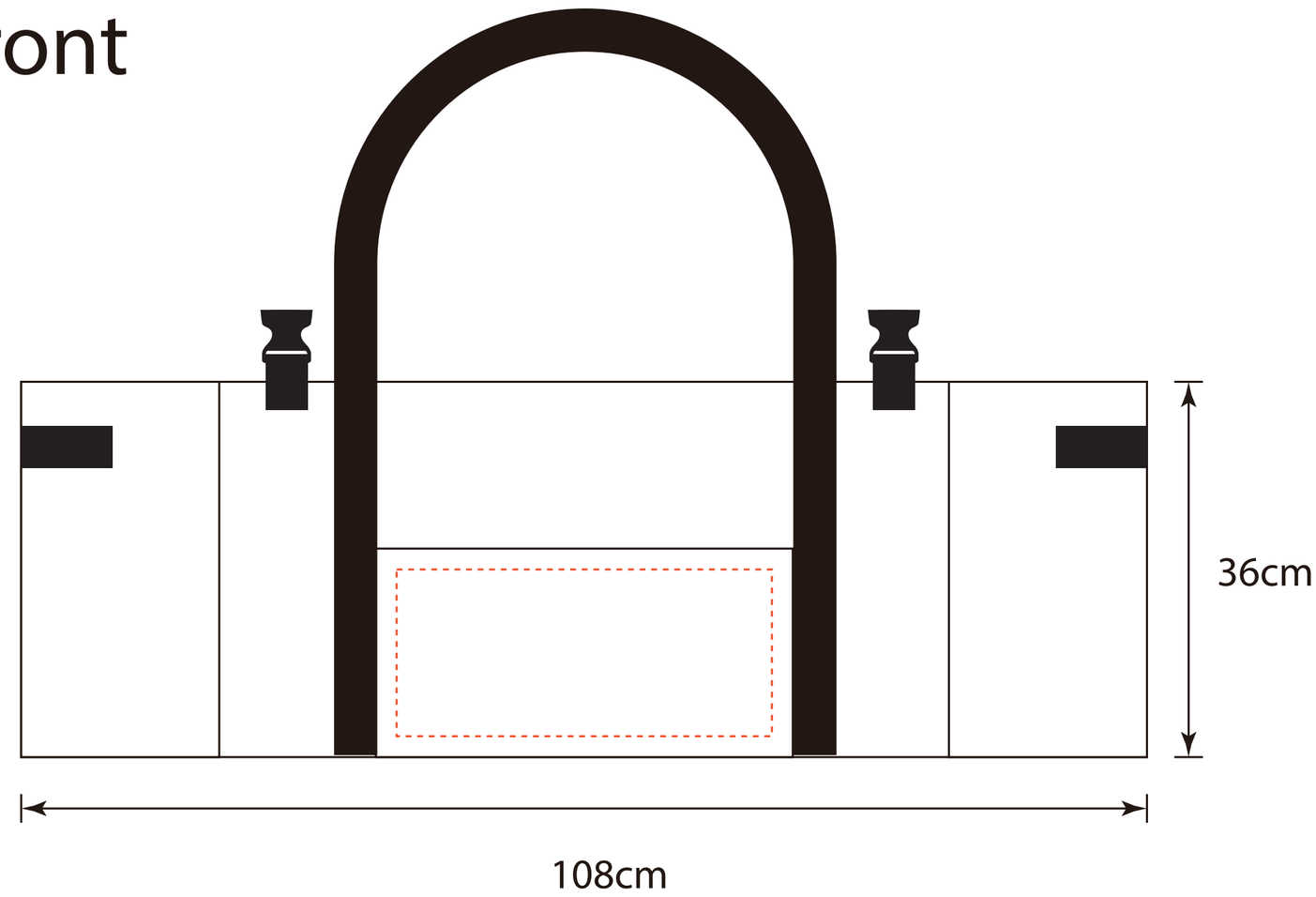

Back

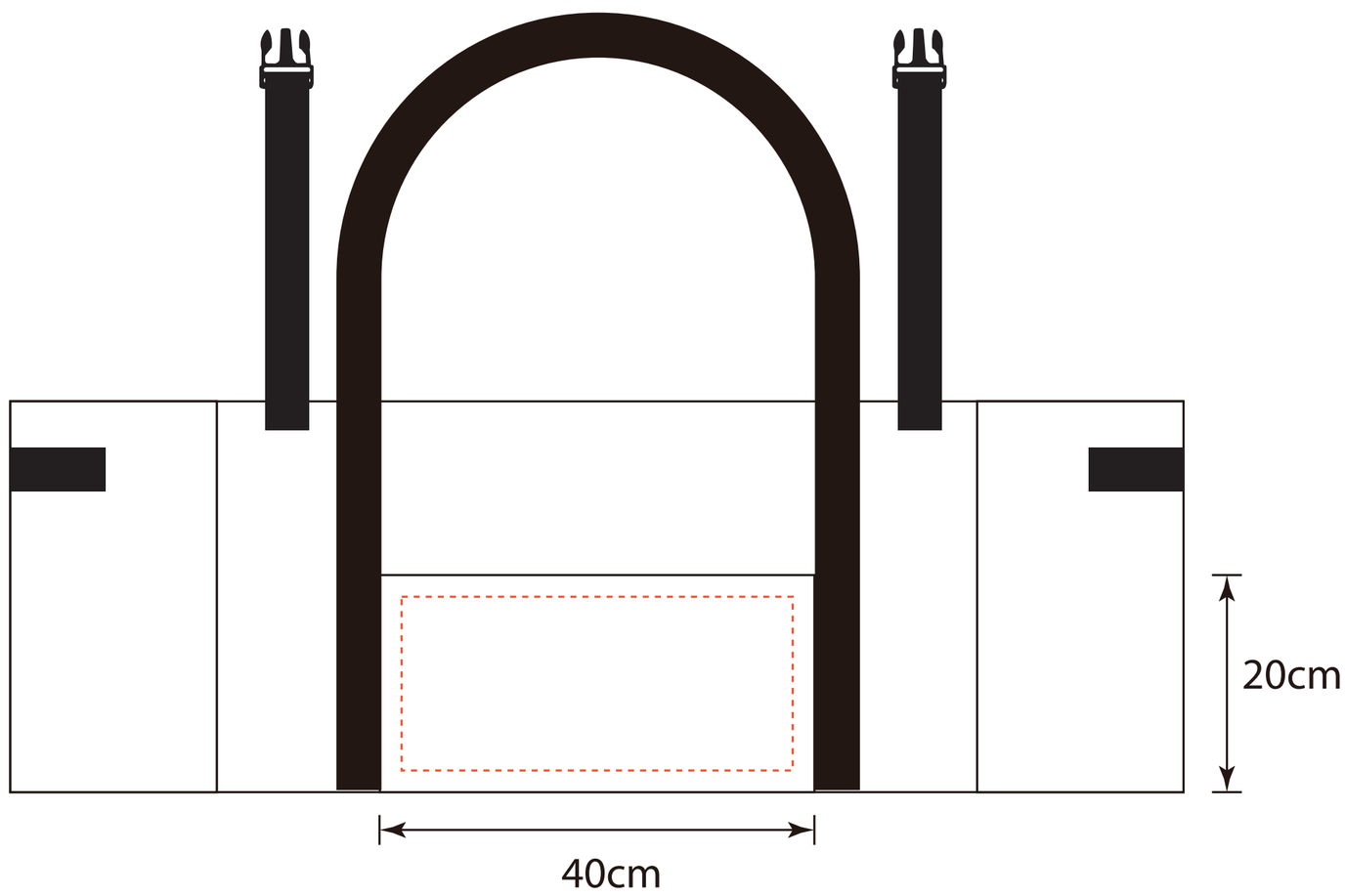
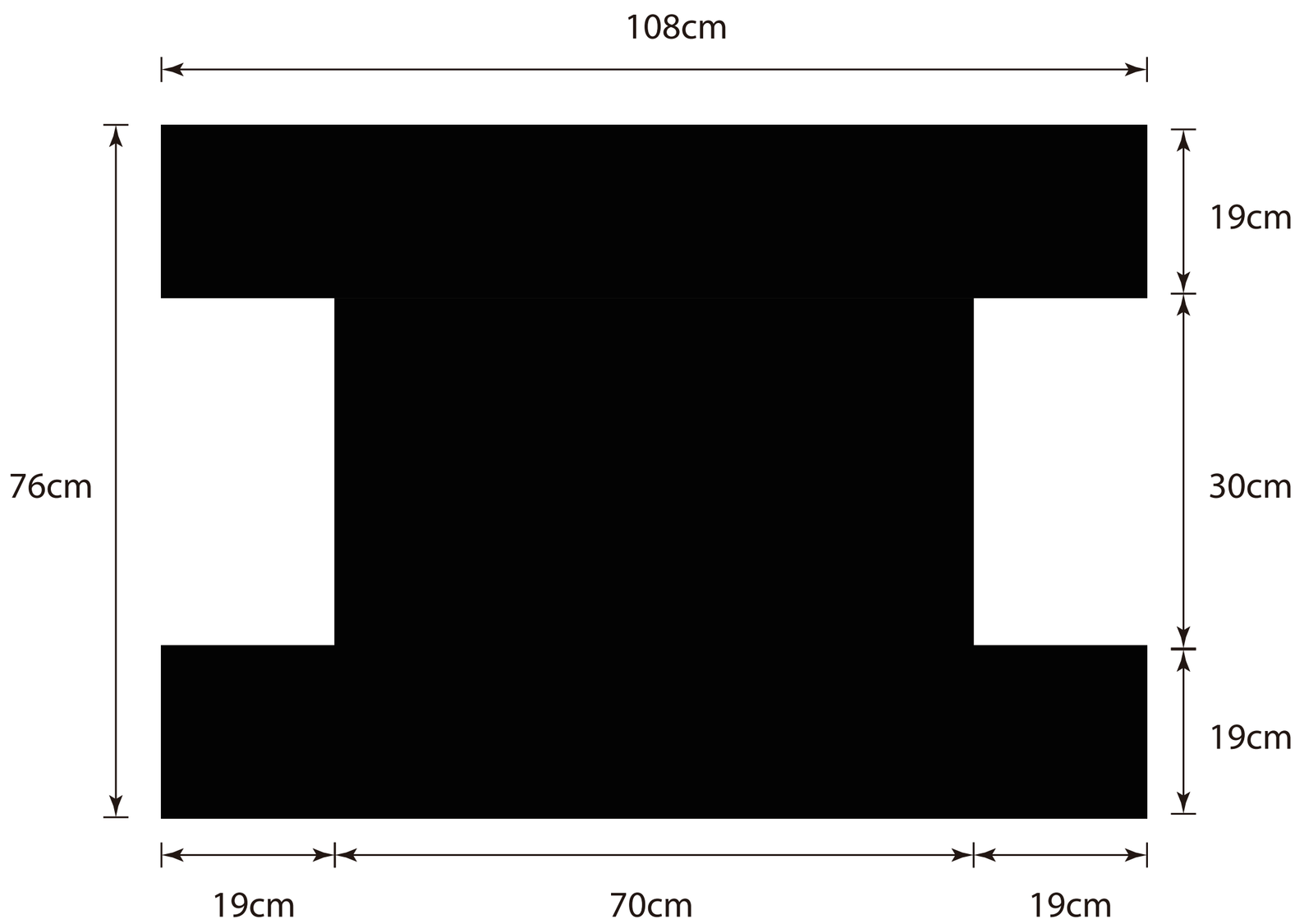
Bottom