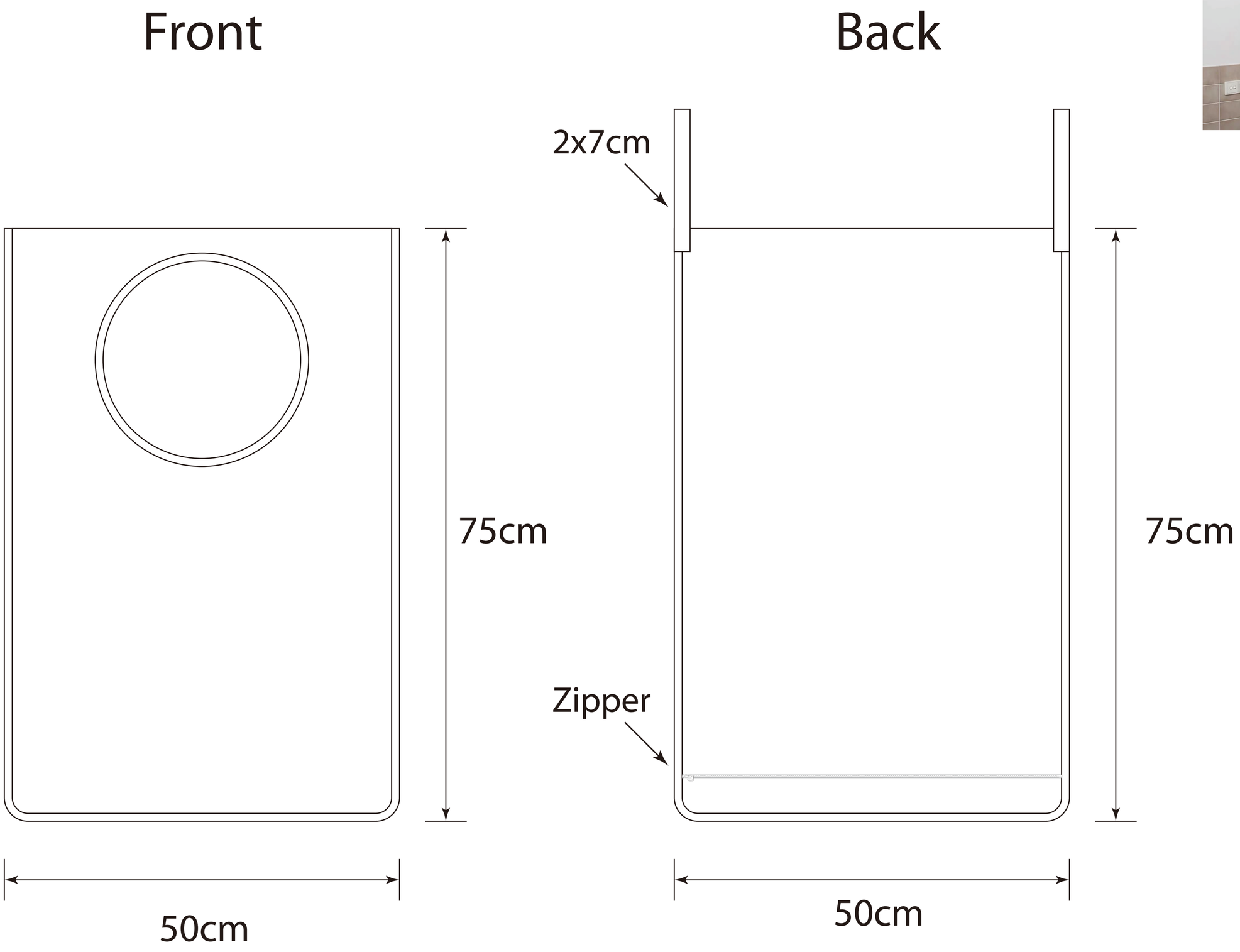
Front
Back
2x7cm
75cm
75cm
Zipper
50cm
50cm