WP02-90CM

WP02-90CM

Front

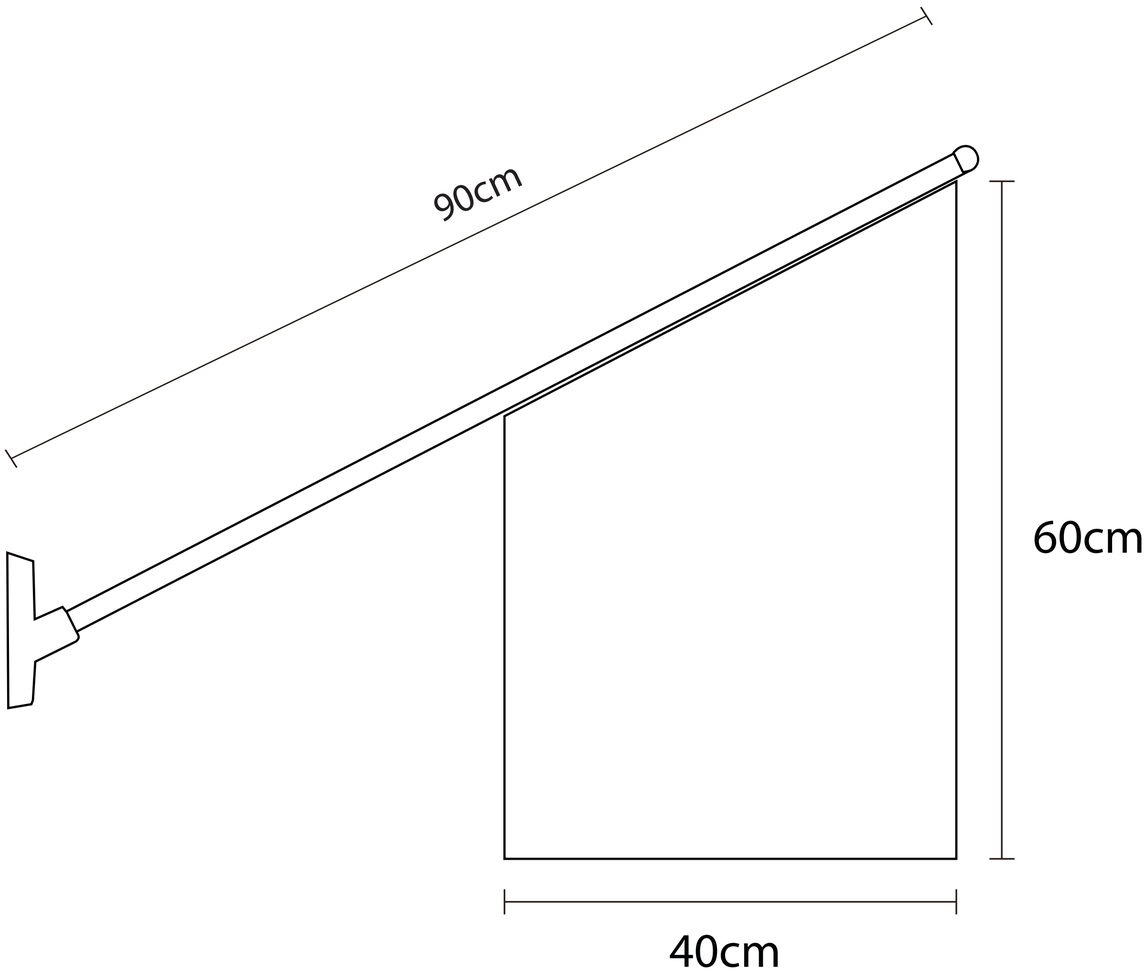
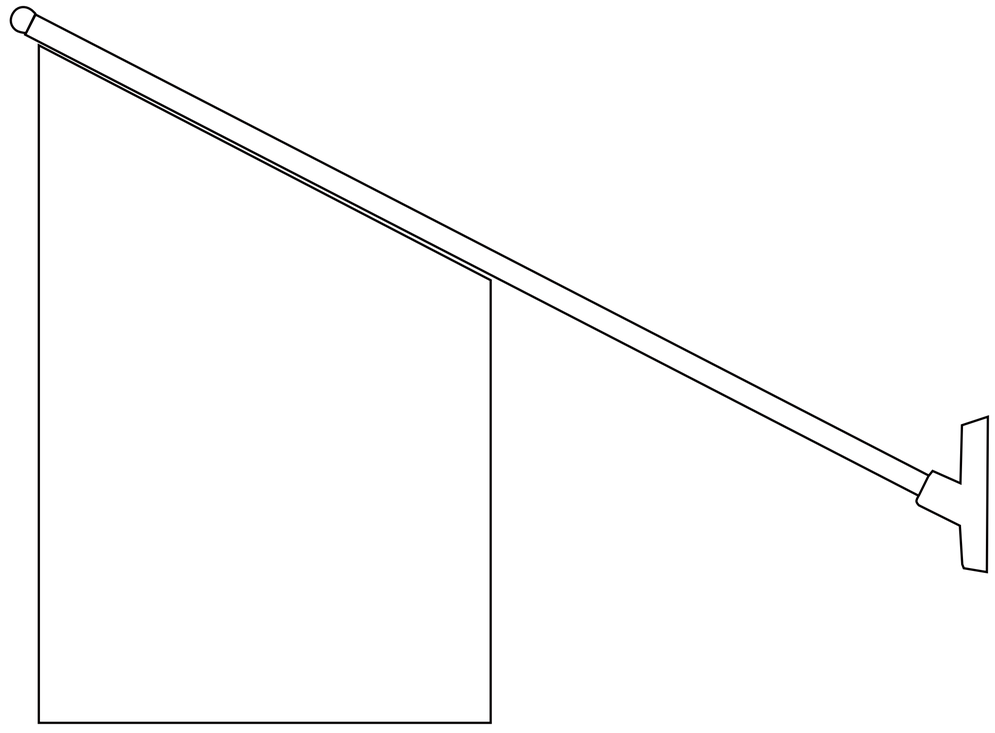
Back