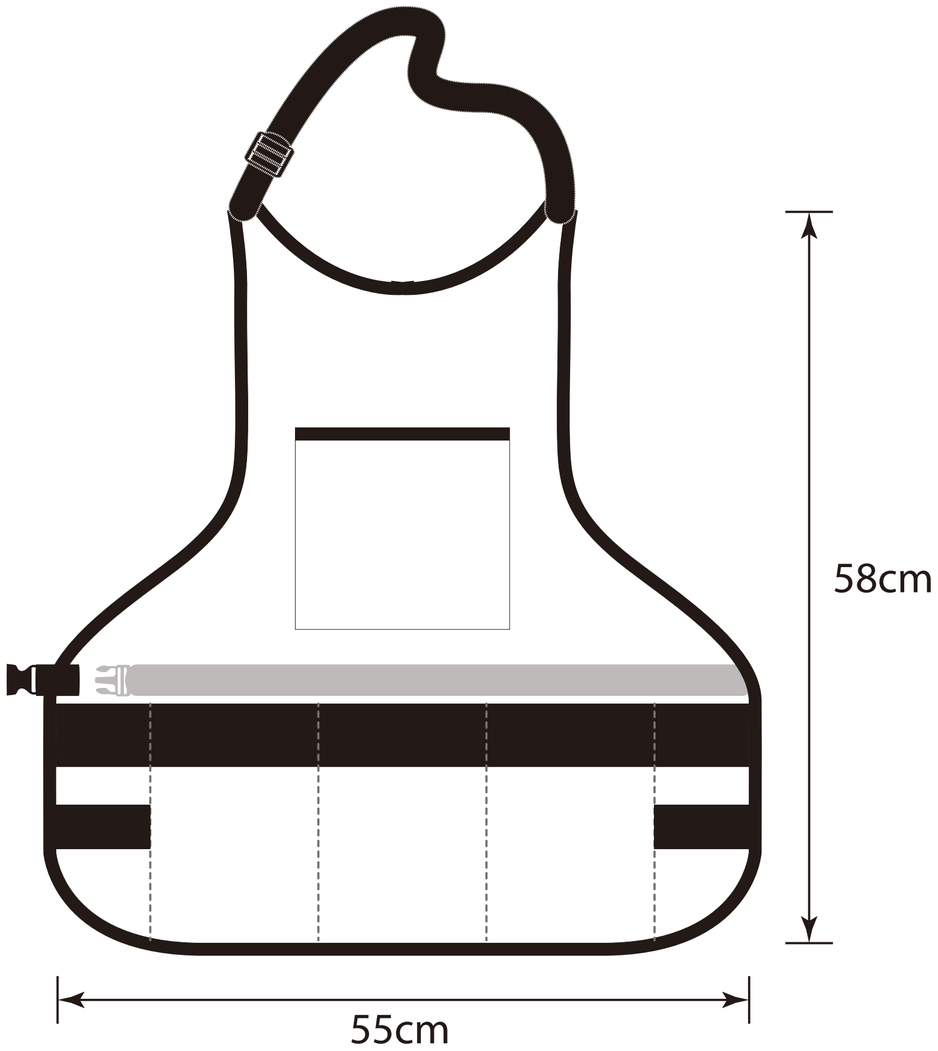

pocket

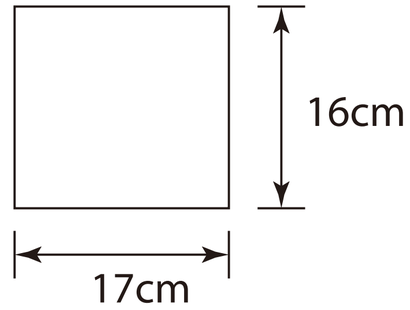

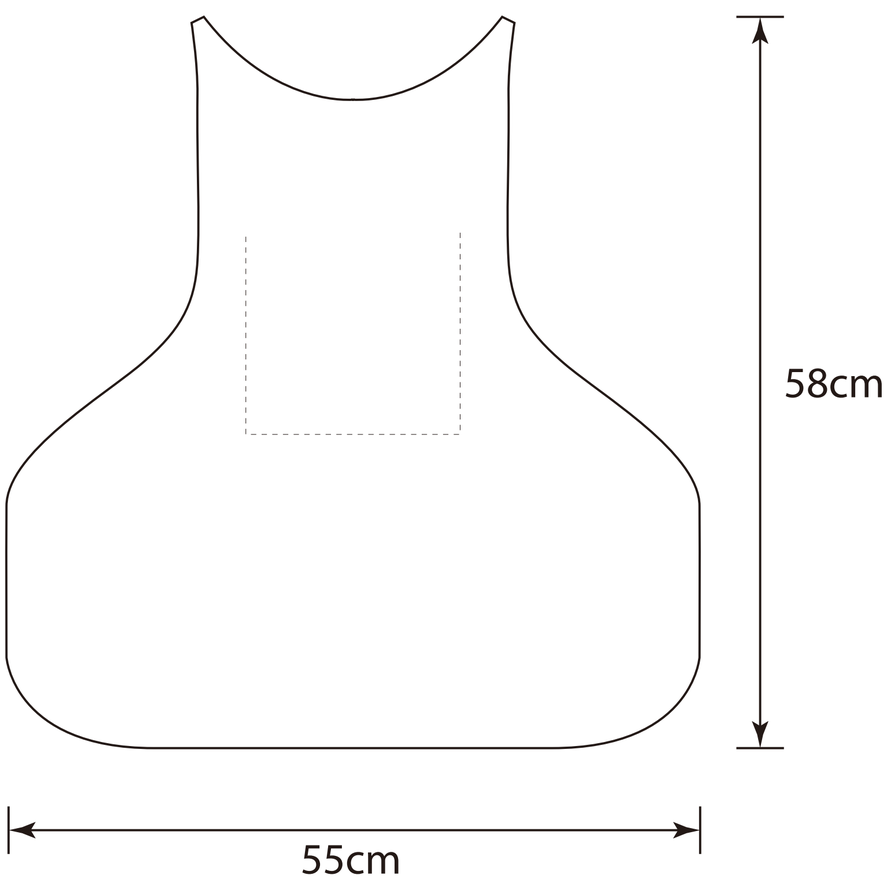

pocket
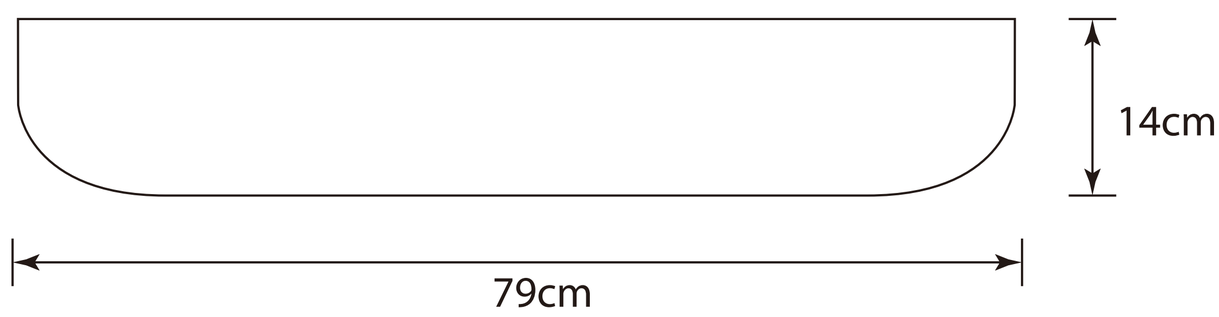
pocket