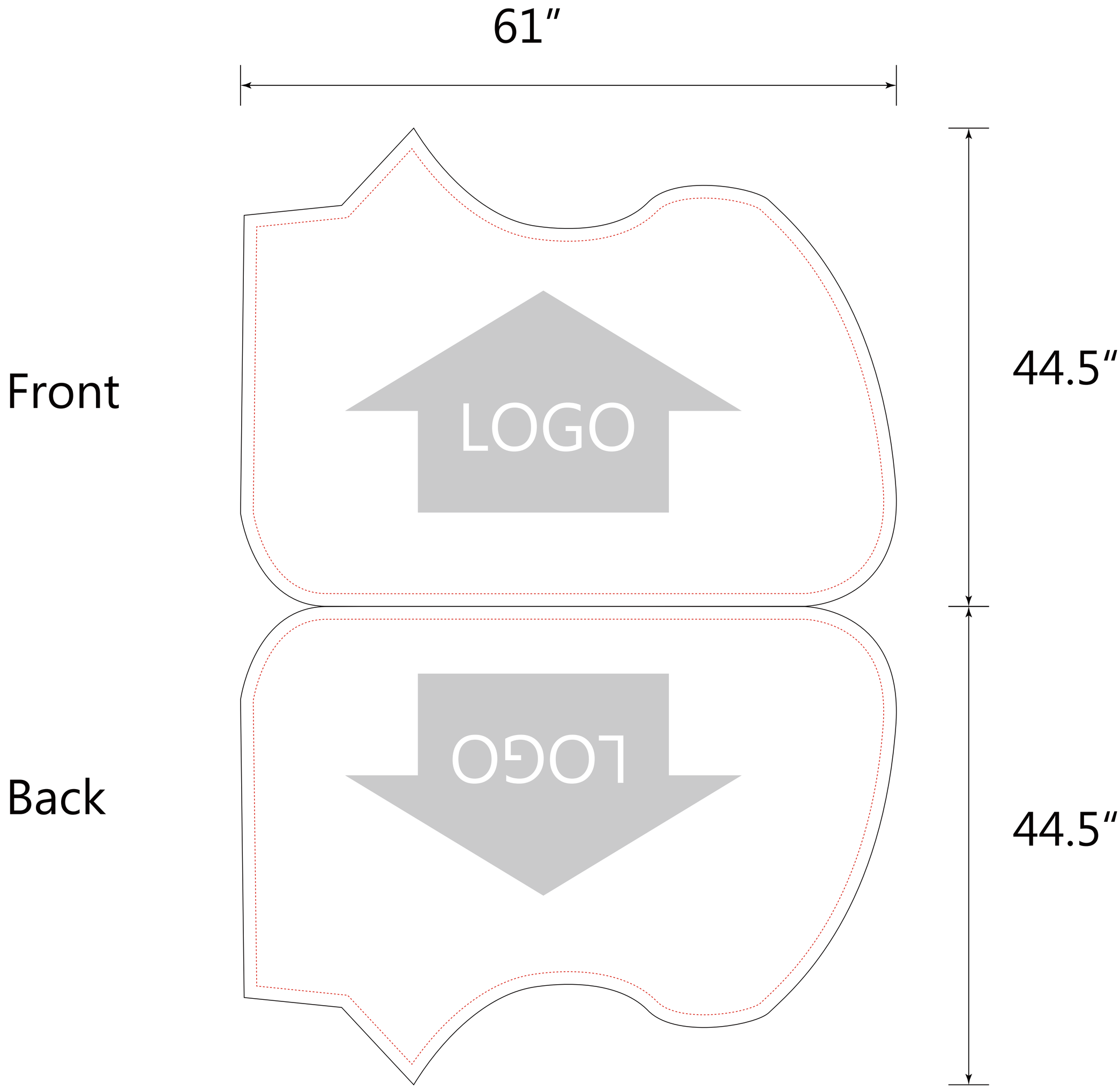
61″
Front
LOGO
44.5″
Back
LOGO
44.5″