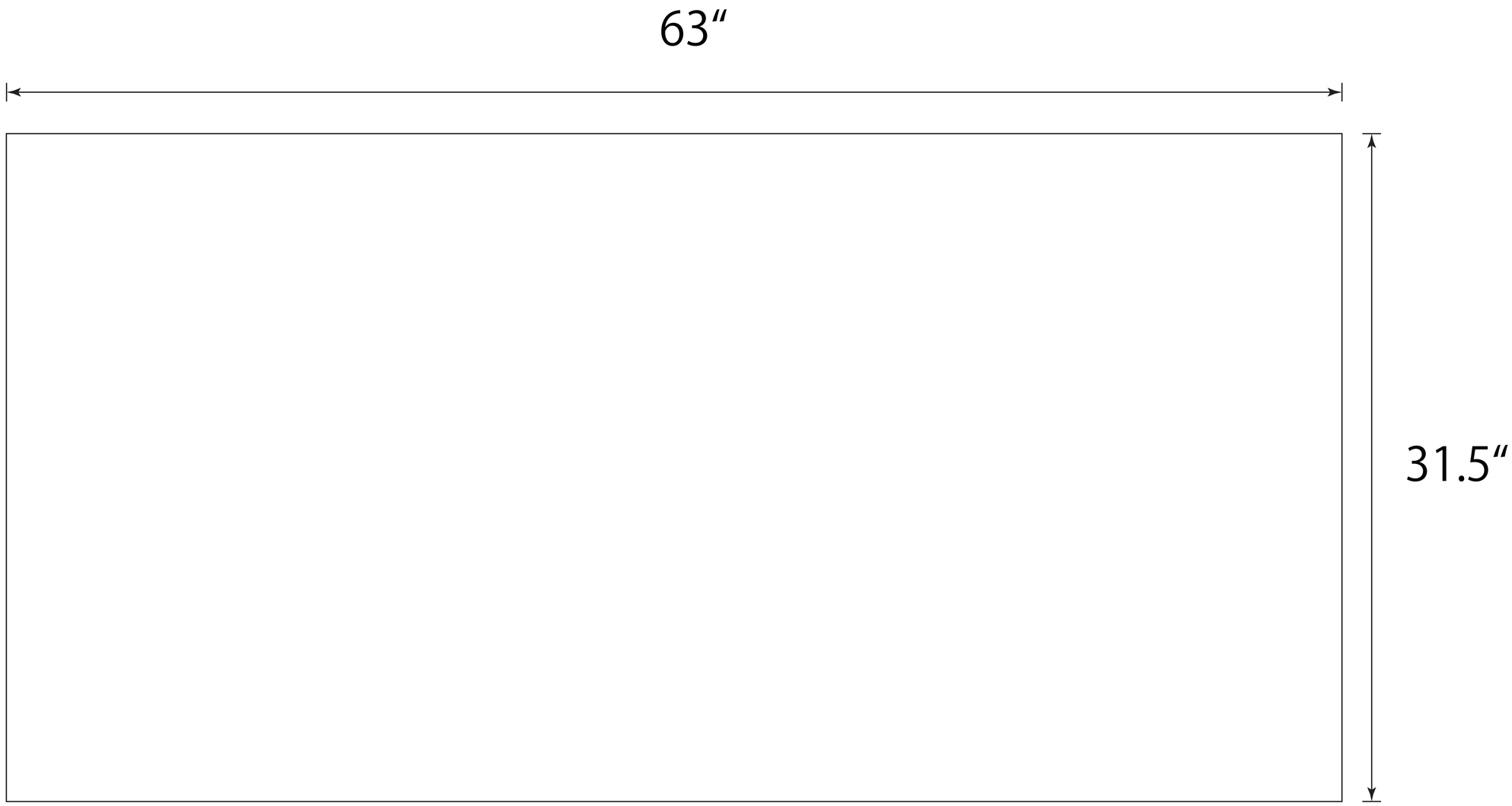
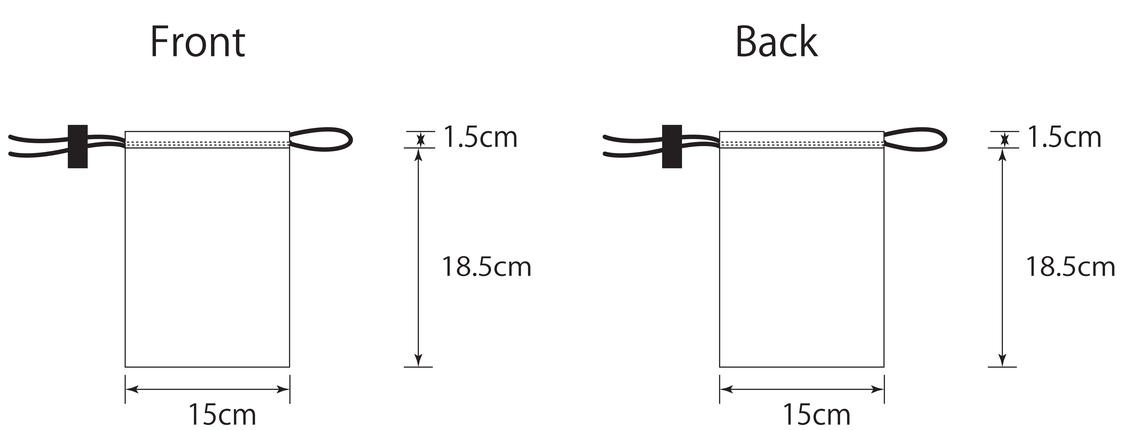
S