Front

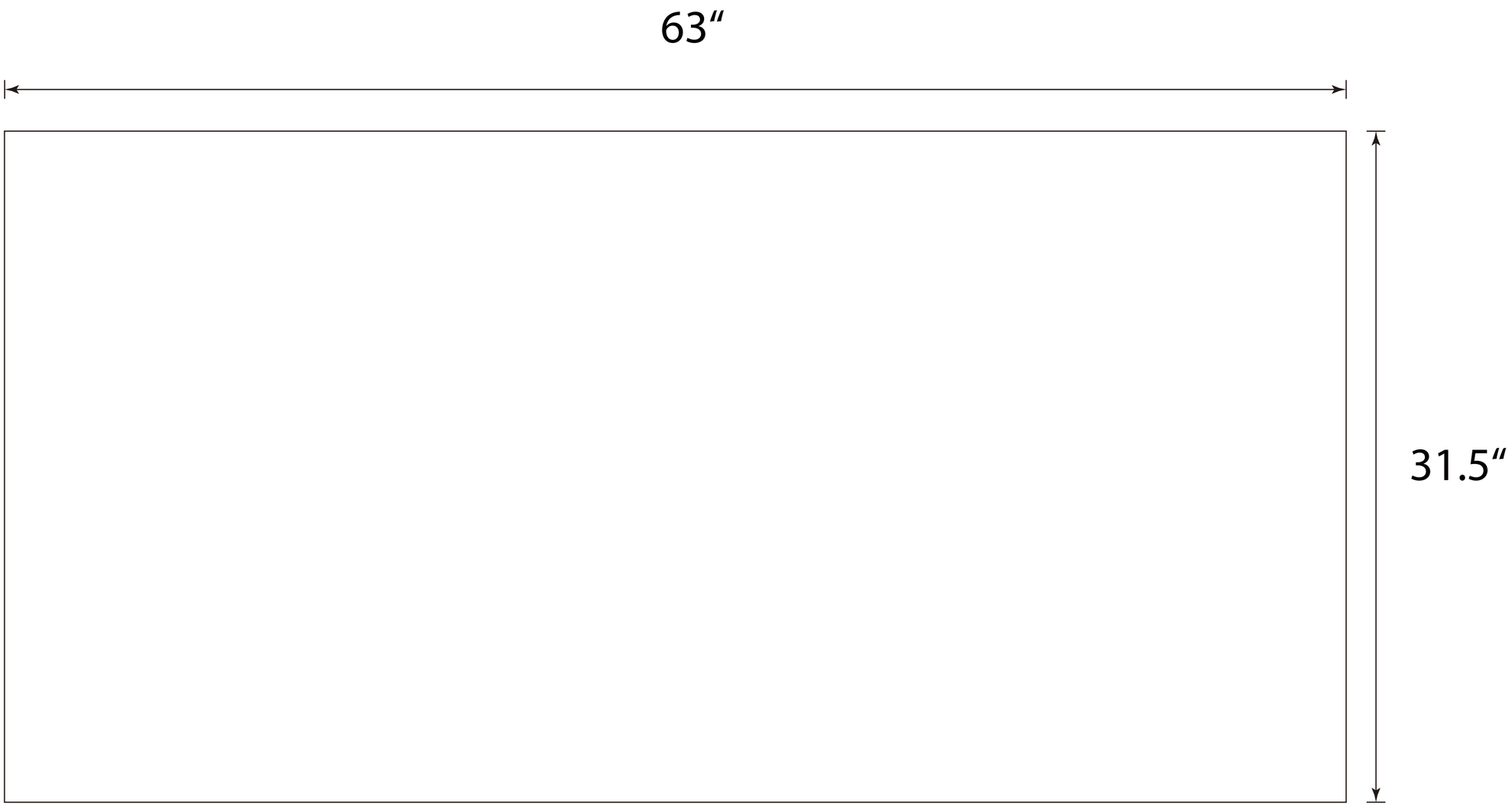

Back

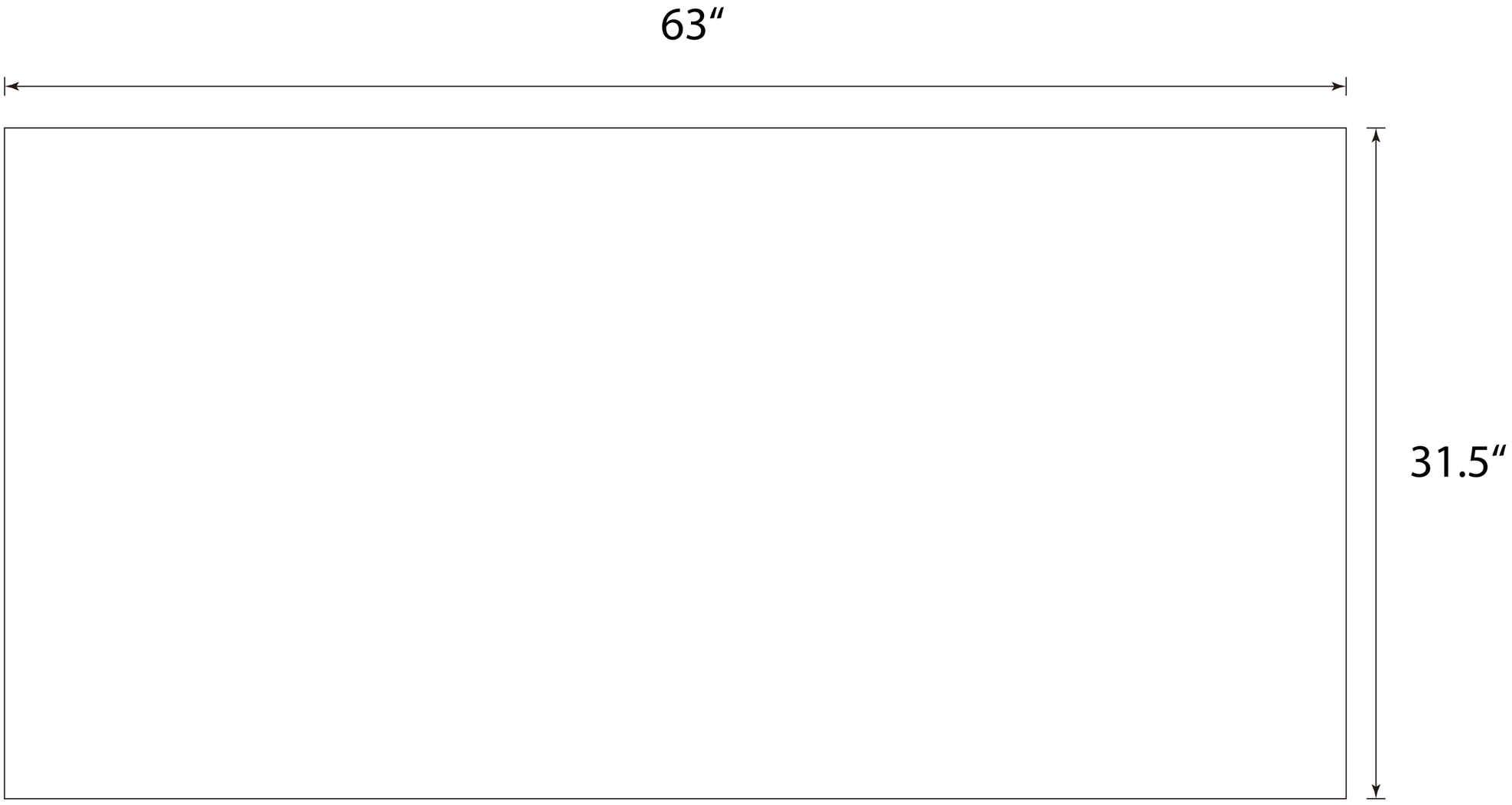
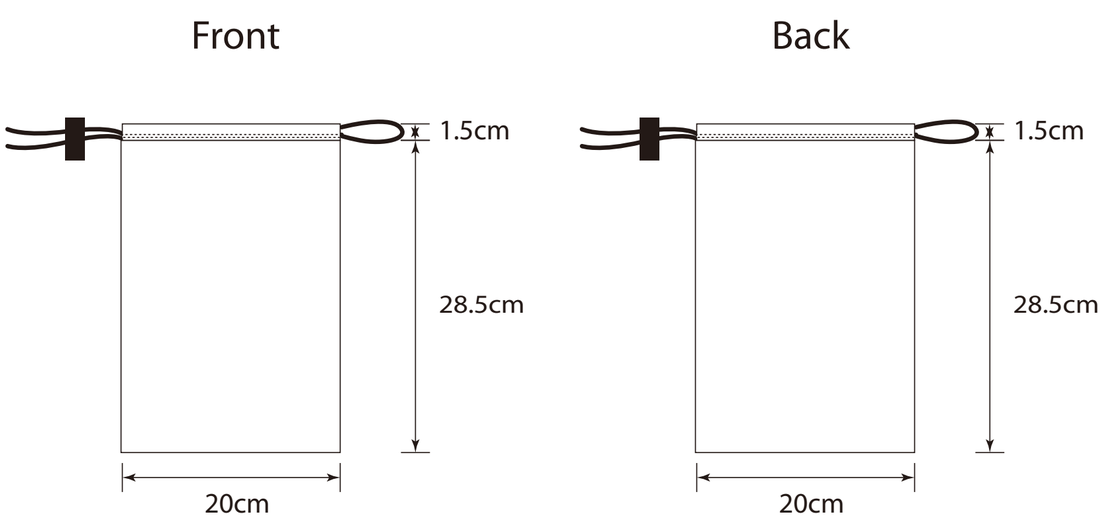
M