Child-15″x20″
S

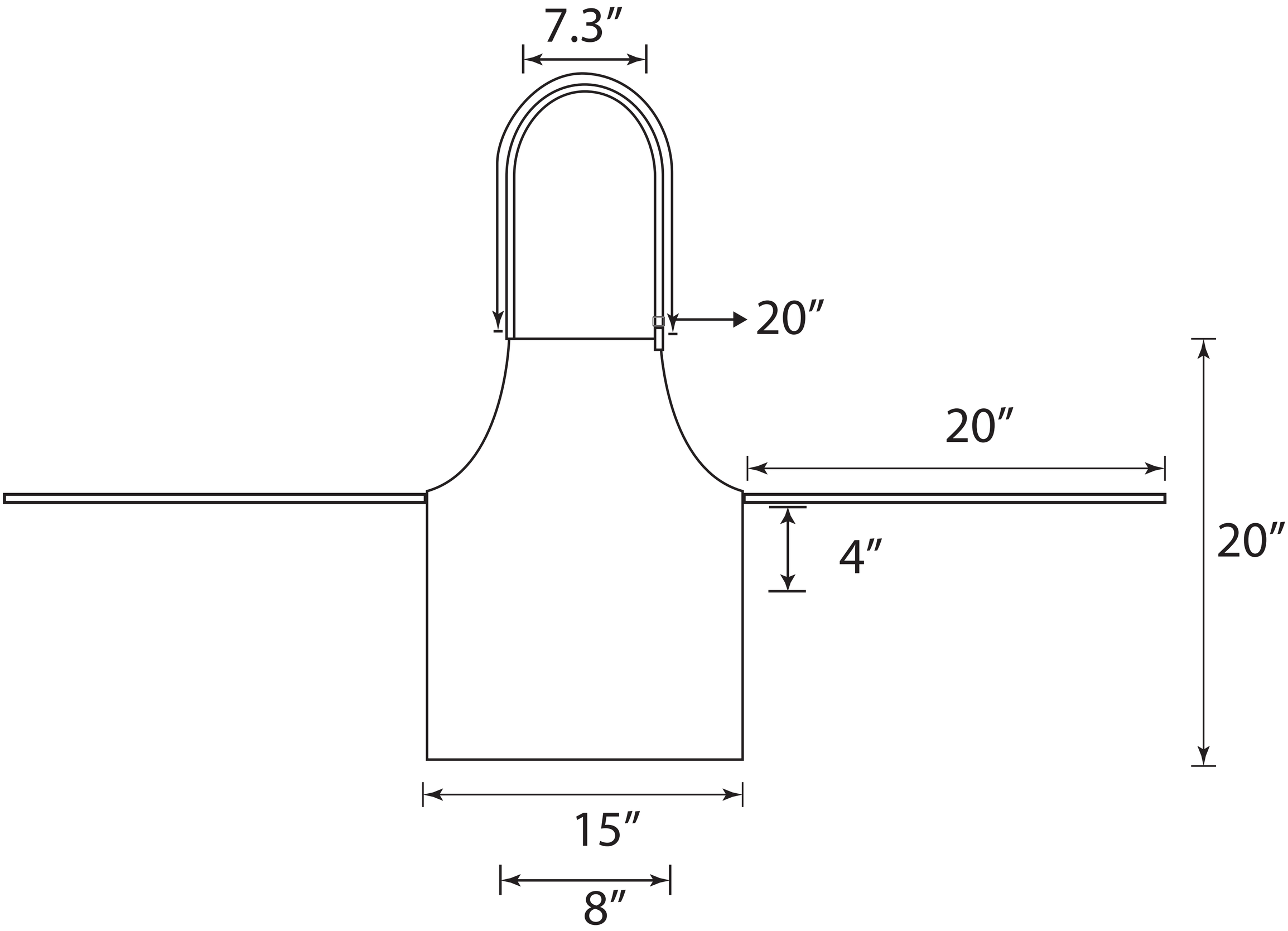

surface

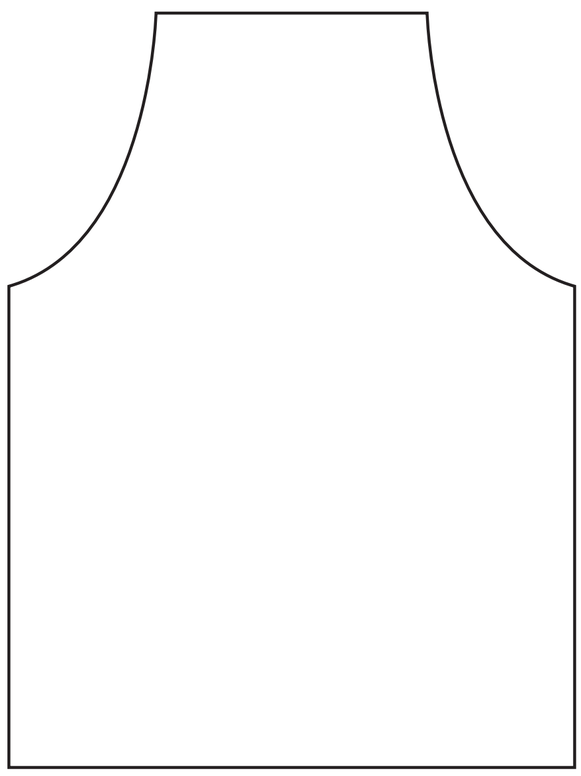
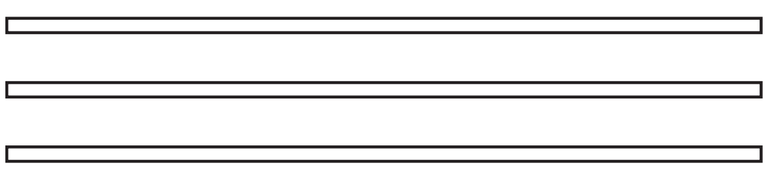
bind