M

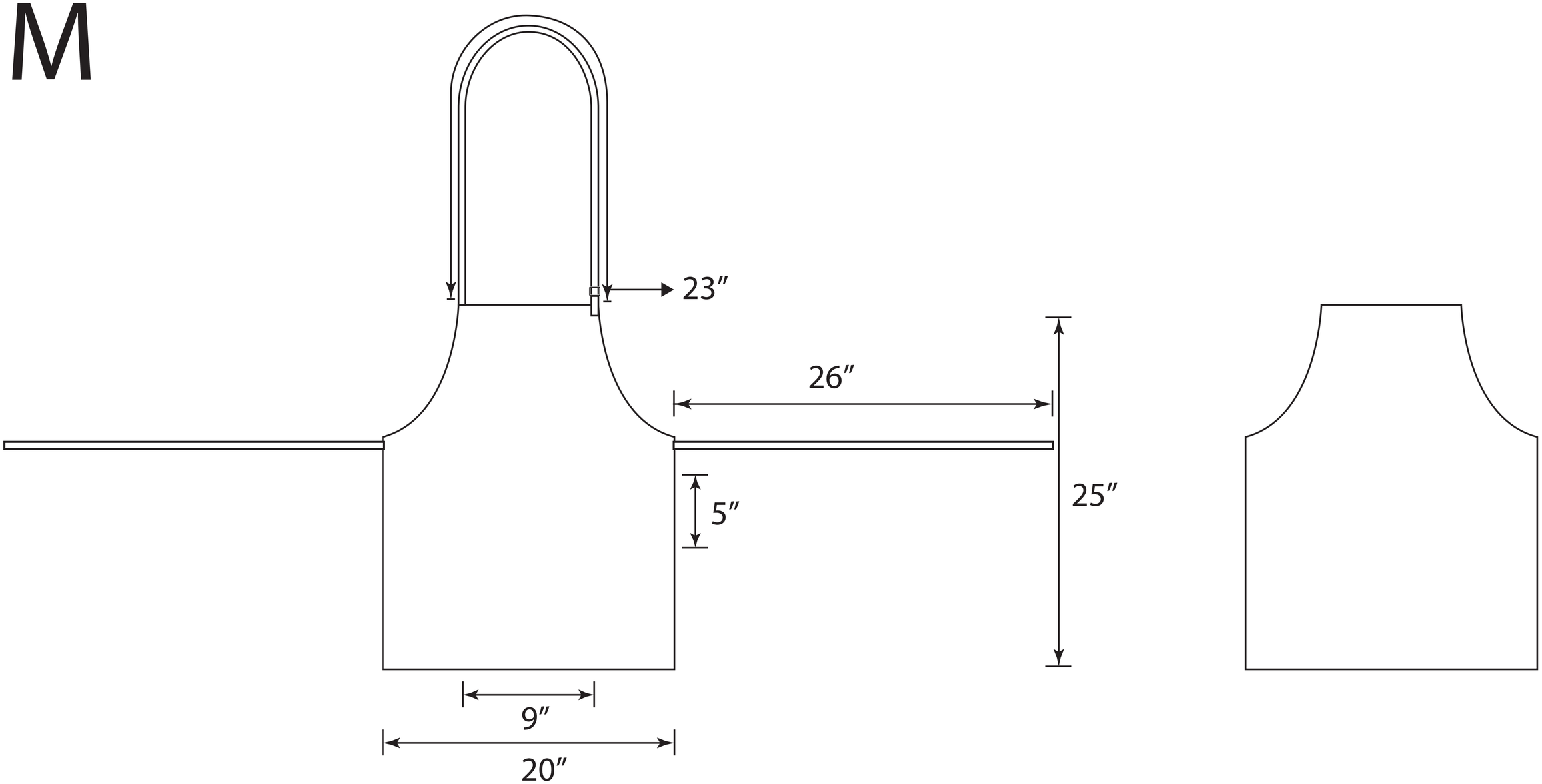

Front

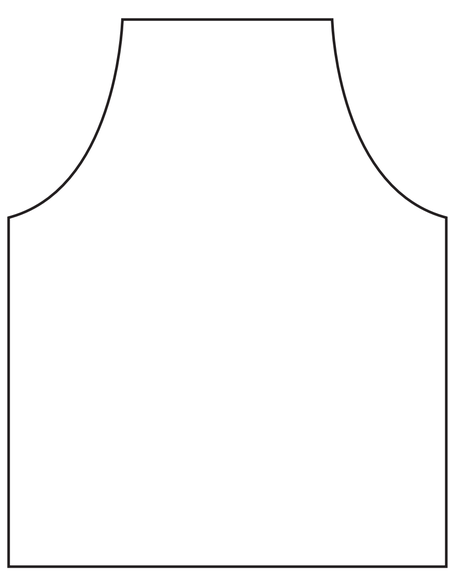

Back

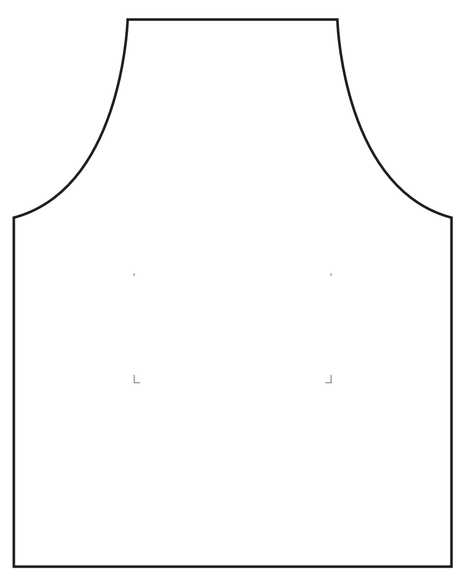
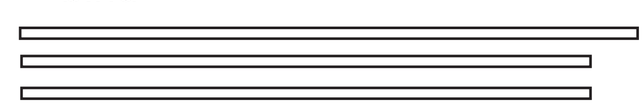
bind