914x1220mm

Front

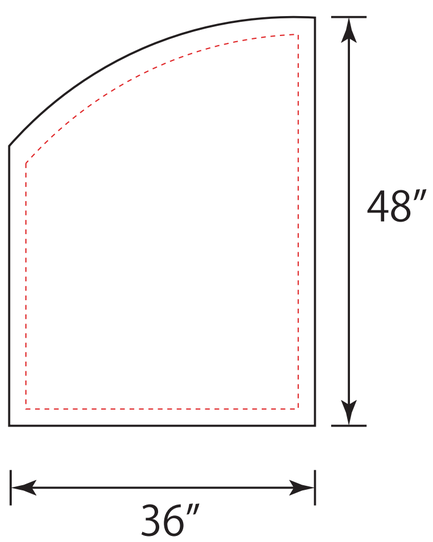

Back

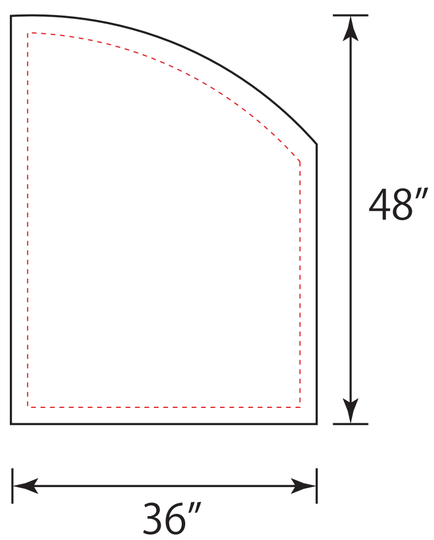

1220x2130mm

Front

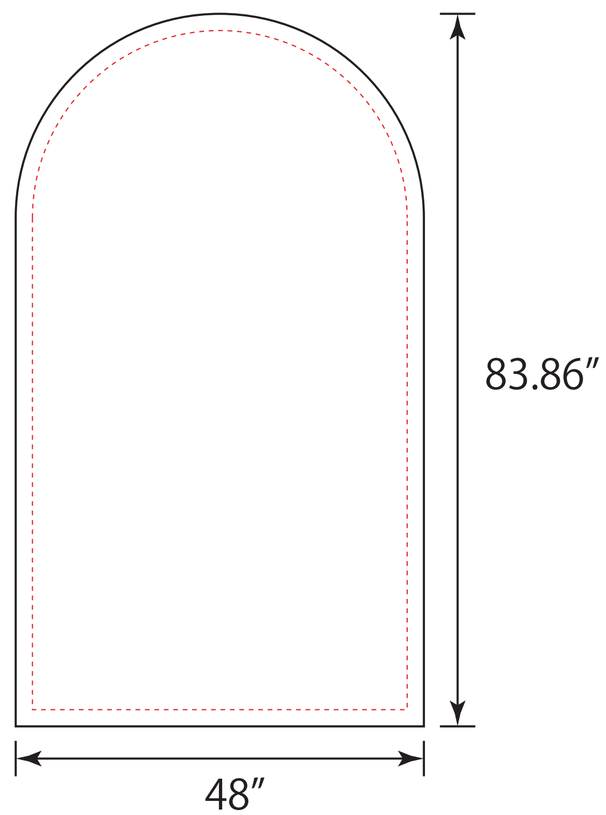

Back

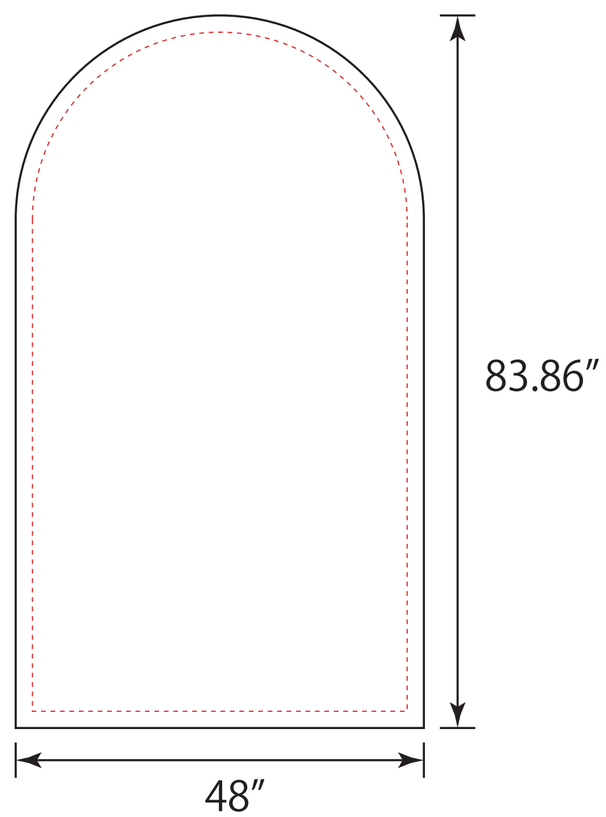

914x1830mm

Front

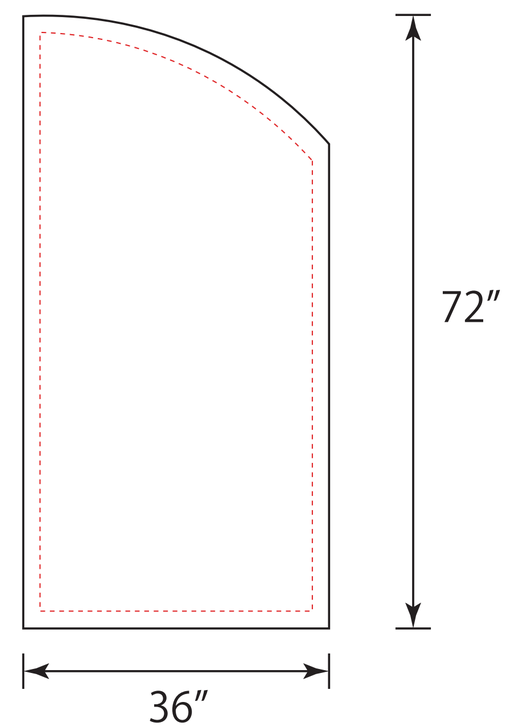
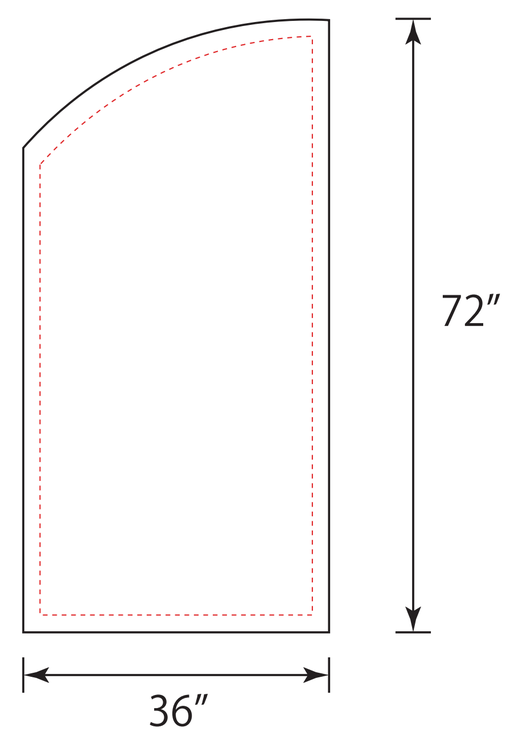
Back