FRESH
FROM
FARM
Fresh
Organic
Healthy
Full Service

2x2

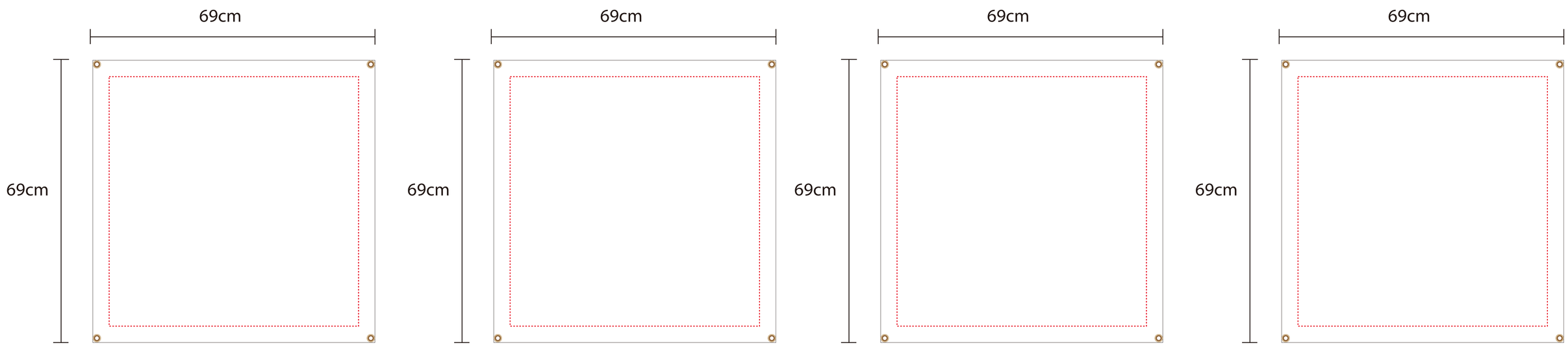
69cm
69cm
69cm
69cm
69cm
69cm
69cm
69cm