Scale: 2:1

Front Full back wall

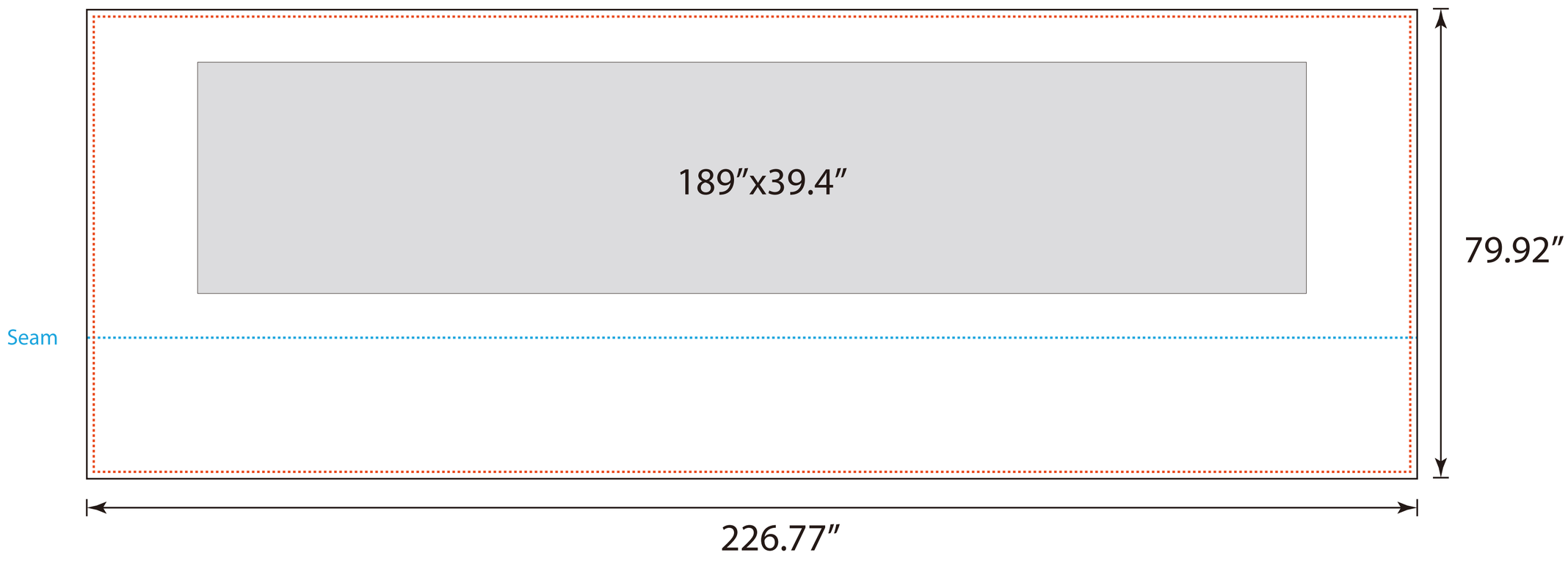
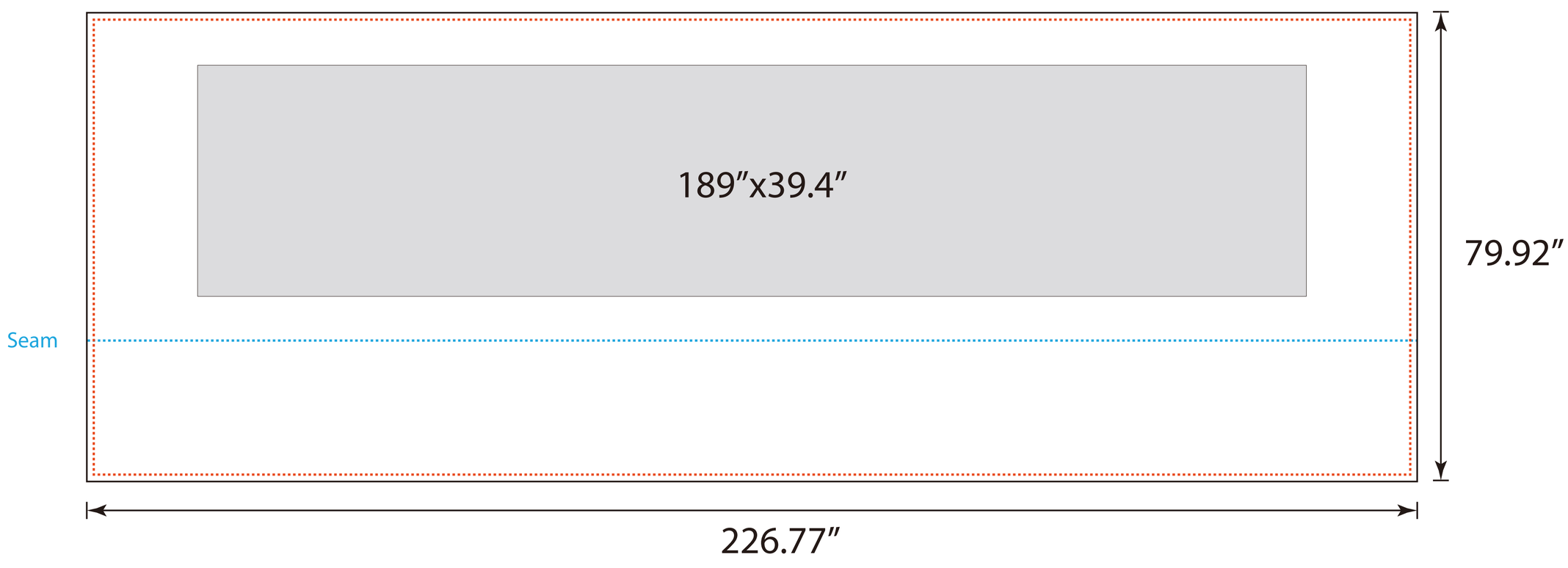
Back Full back wall