Dia33*H60 Dia36*H75 Dia40*H90

Dia33*H60

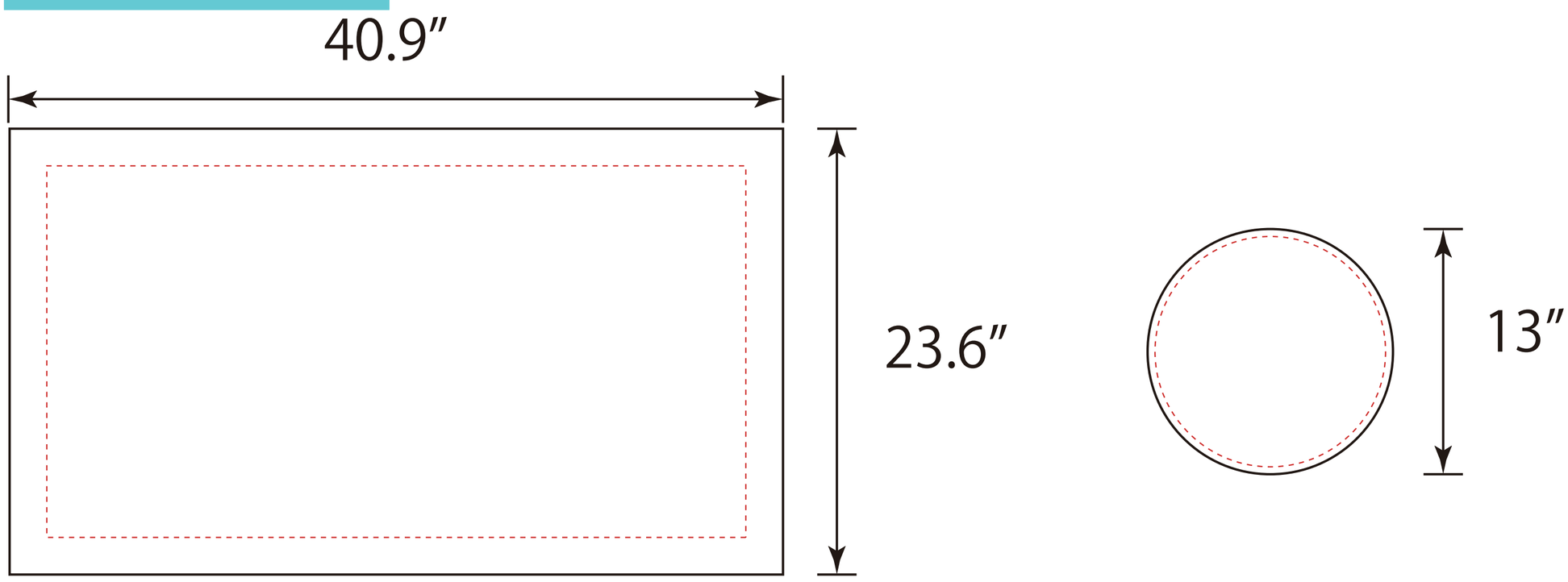

Dia36*H75

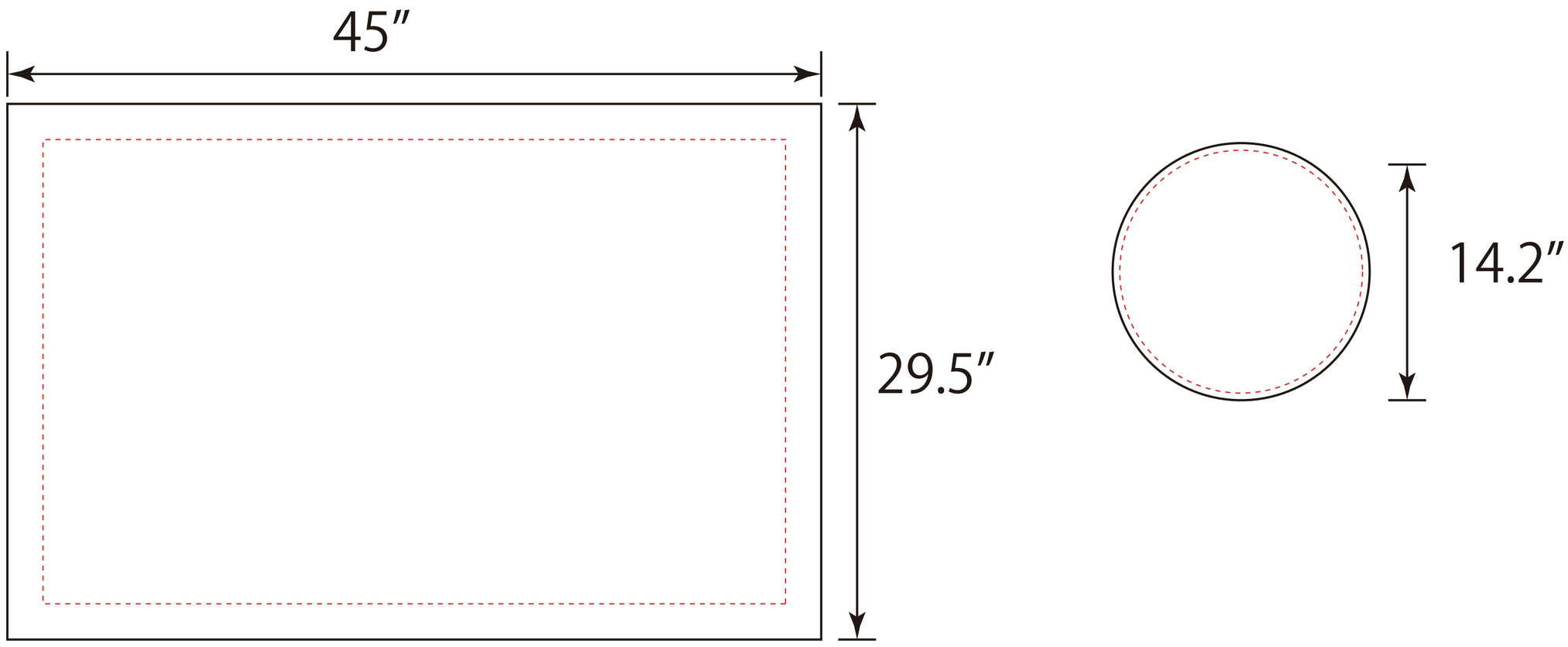
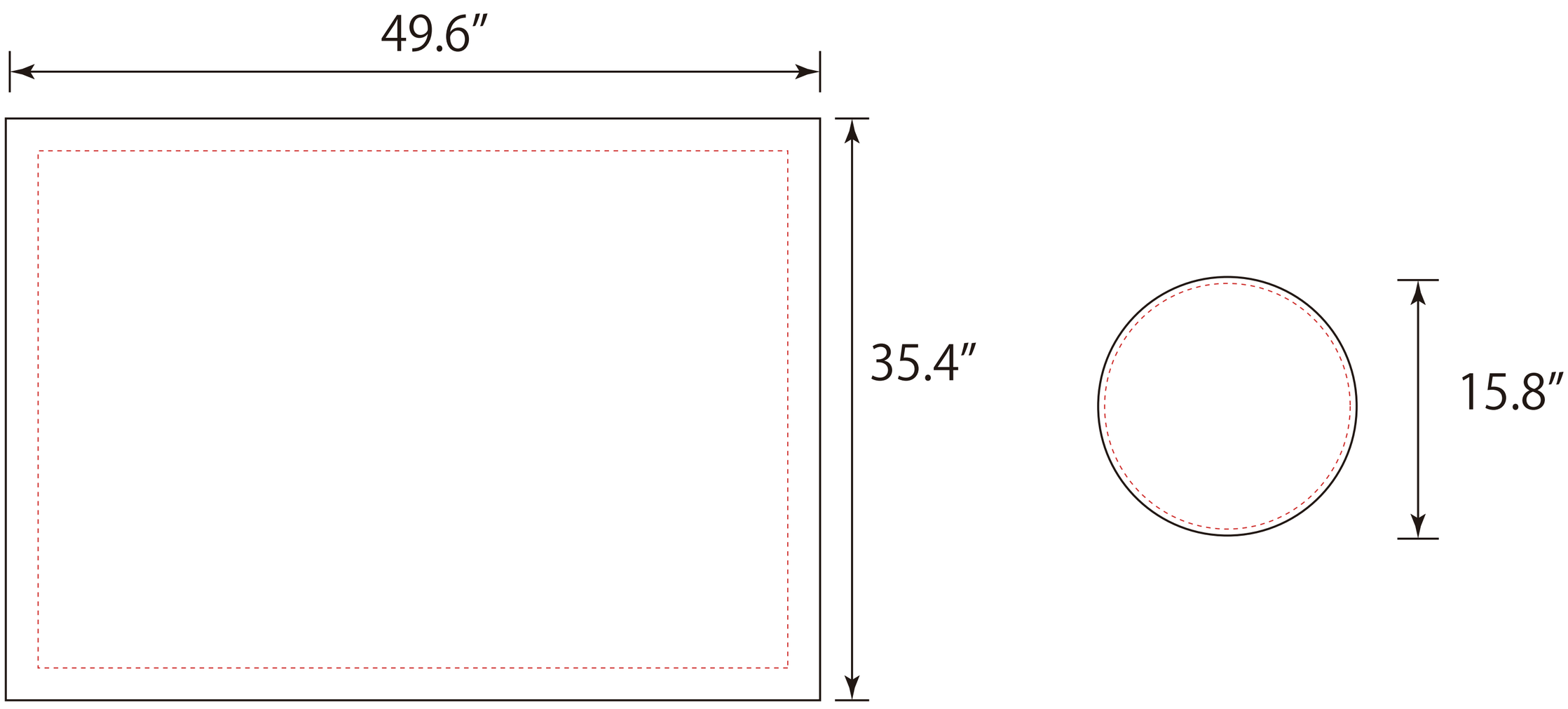
Dia40*H90