Front

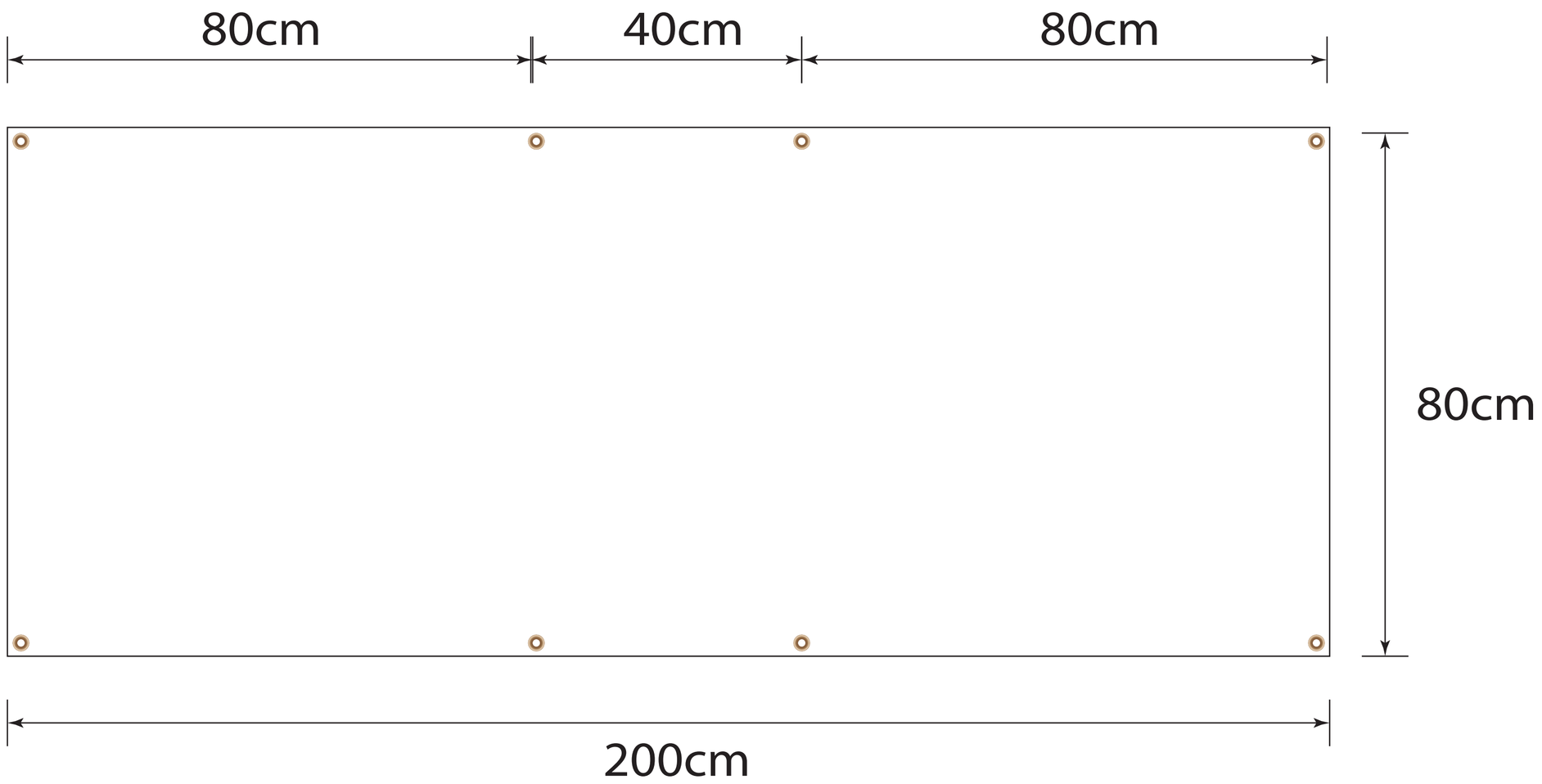

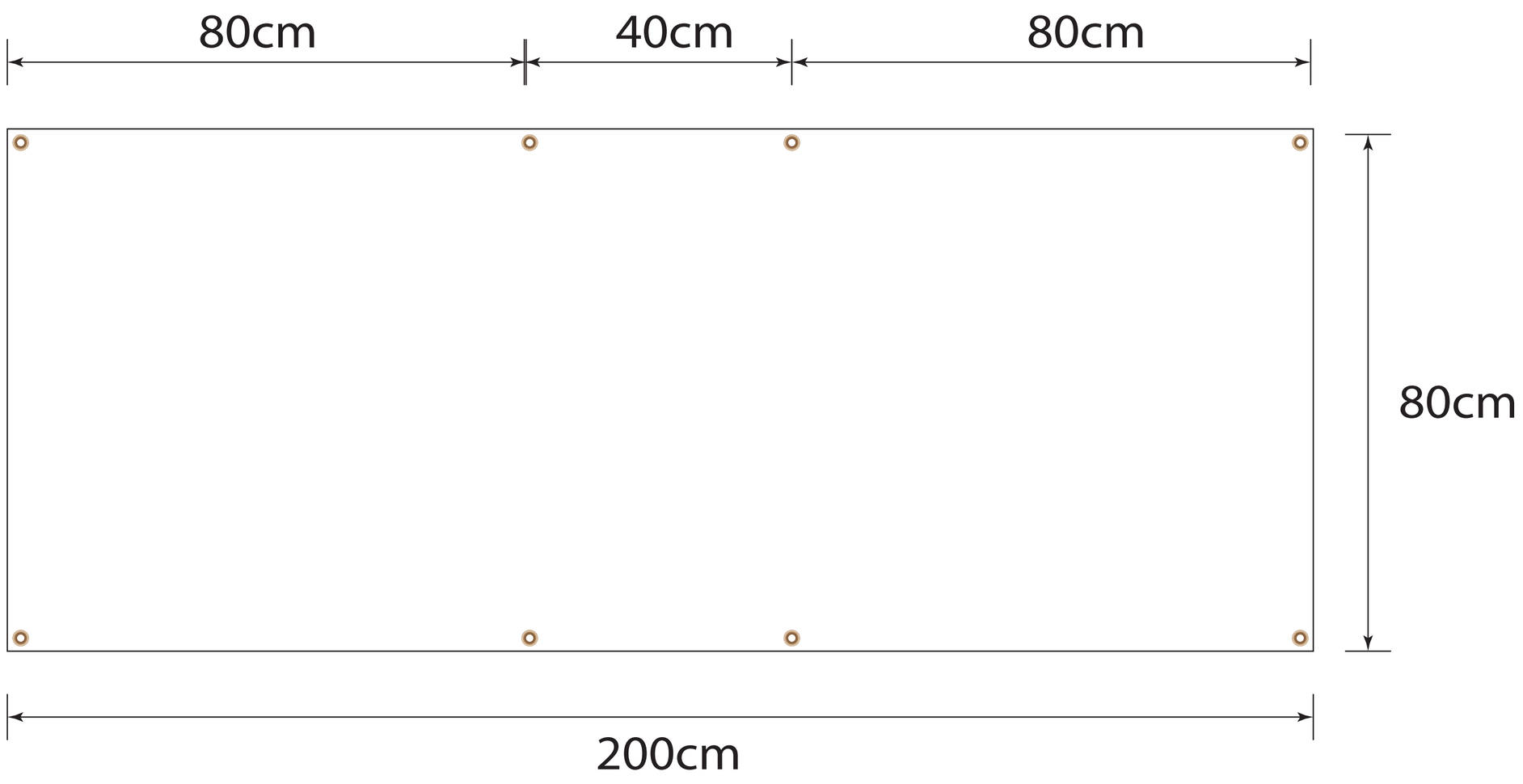
Back