Front

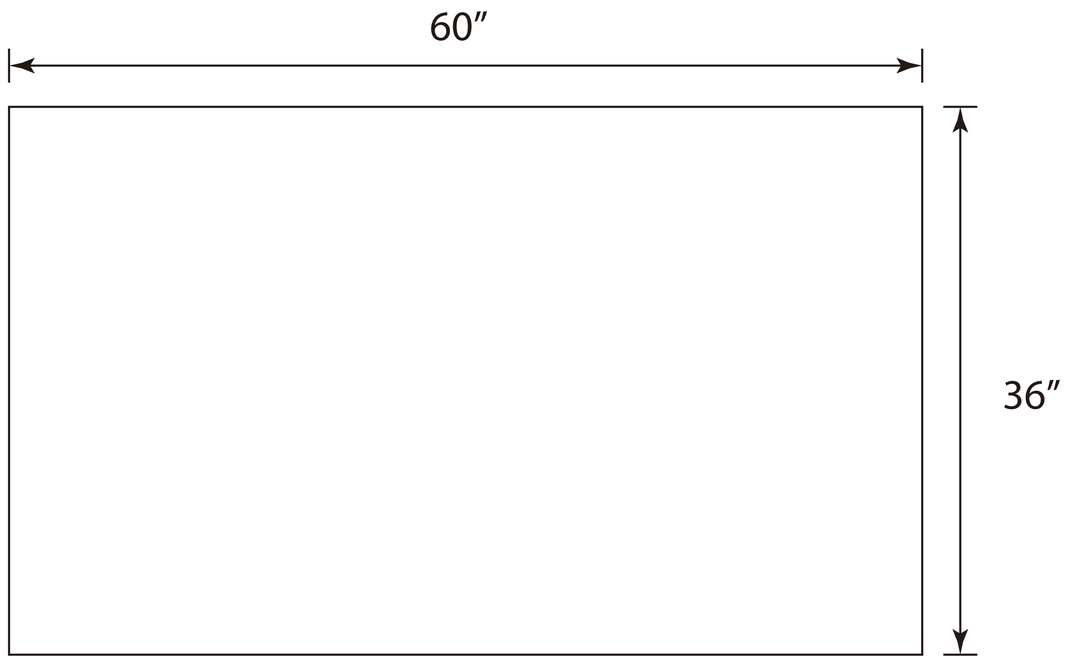

Back
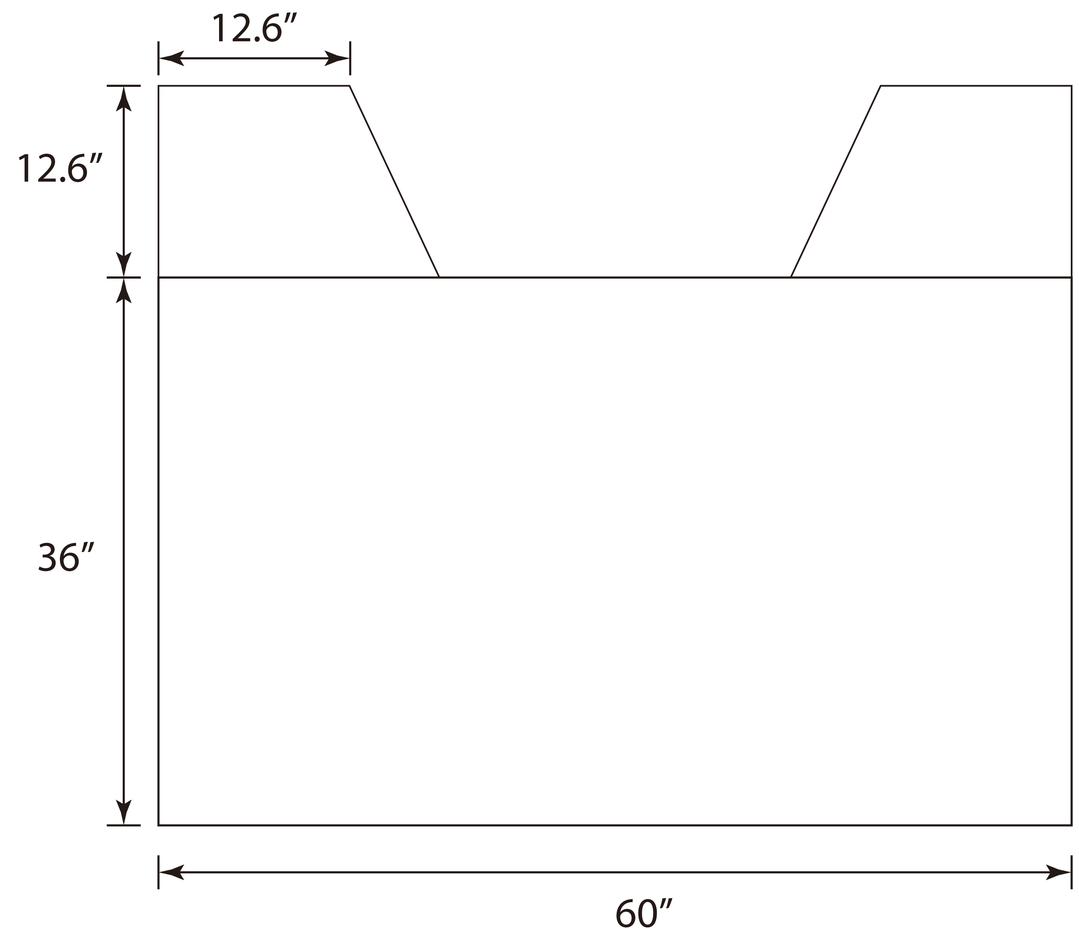
Unfold