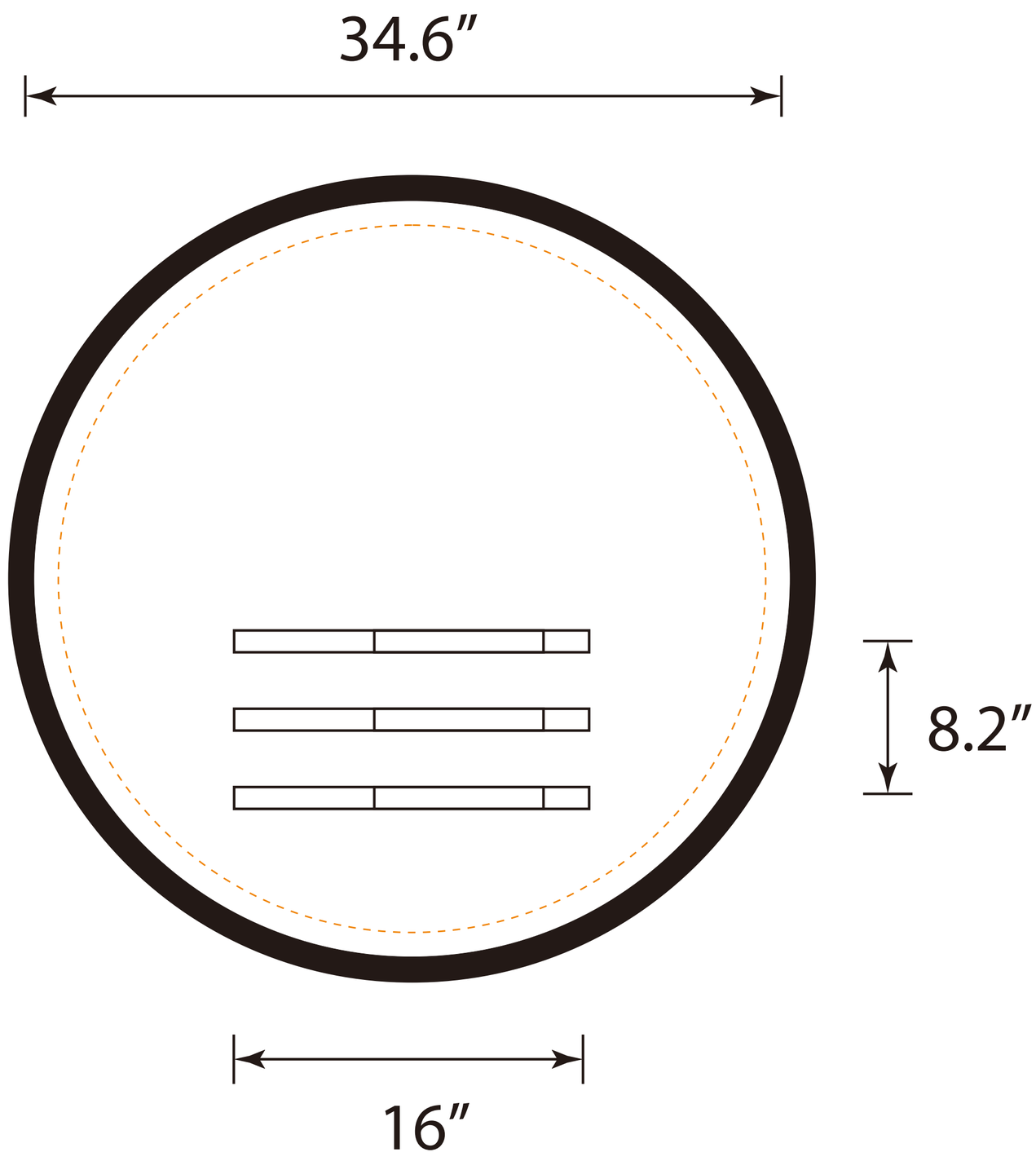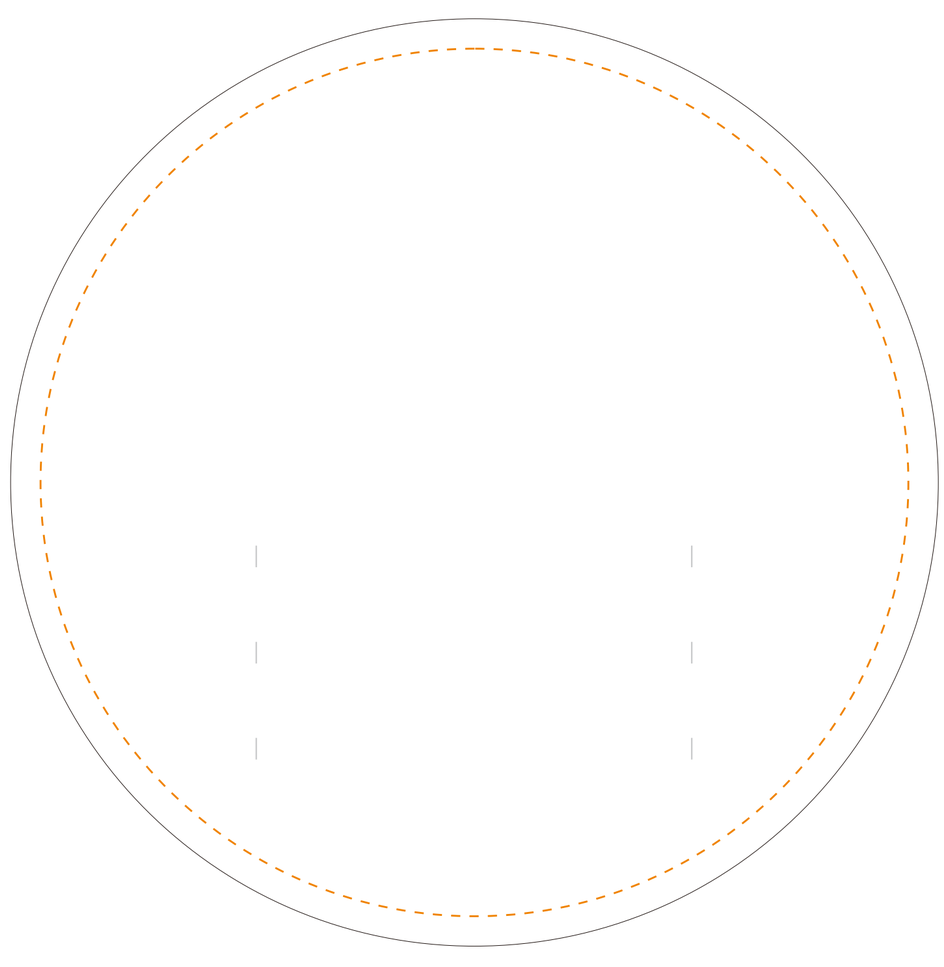39.37"-240G