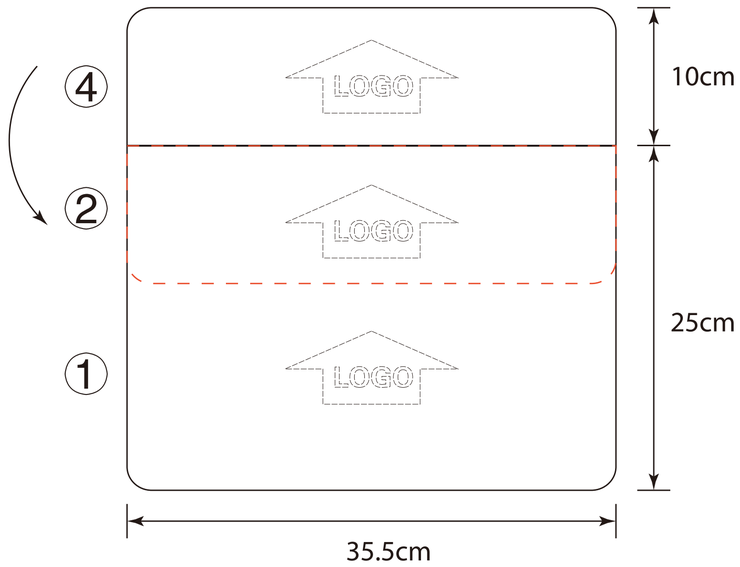
4
2
1
LOGO
LOGO
LOGO
10cm
25cm
35.5cm

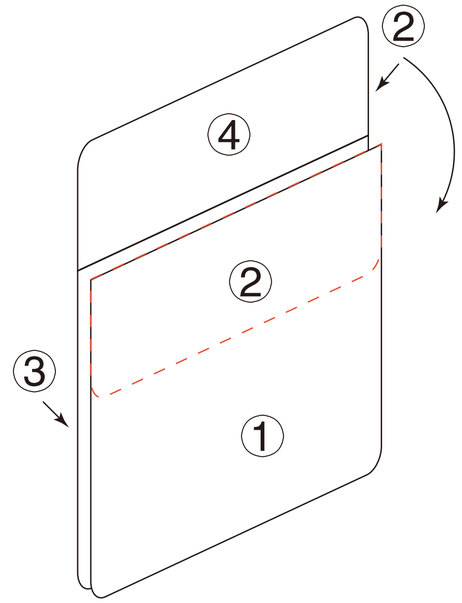
2
4
2
3
1

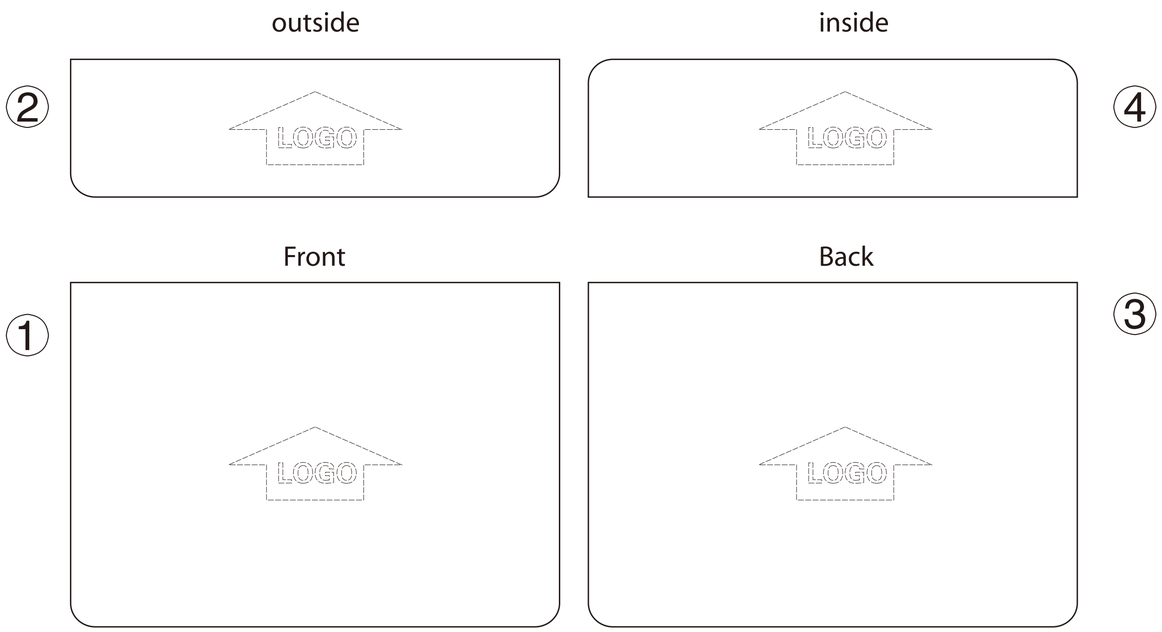
outside
inside
2
4
LOGO
LOGO
Front
Back
1
3
LOGO
LOGO

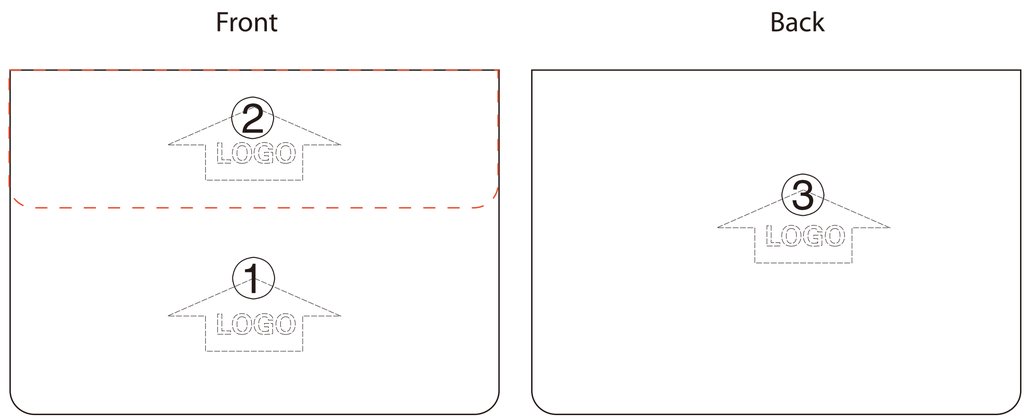
Front
Back
2
LOGO
1
LOGO
3
LOGO