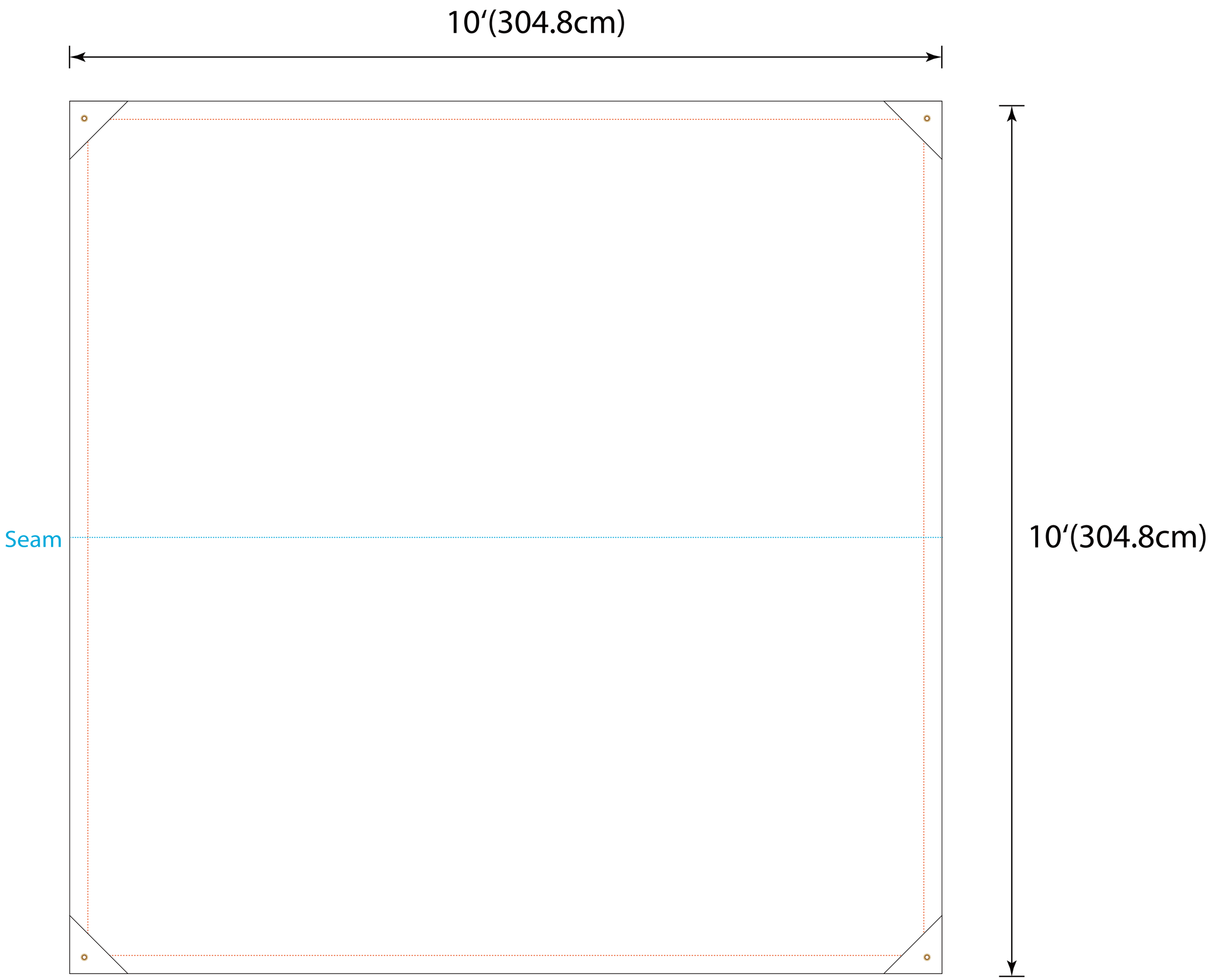
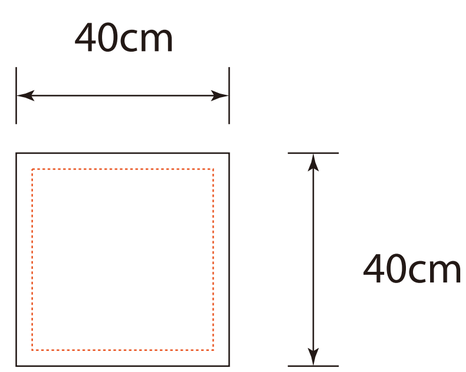
Sandbag X4