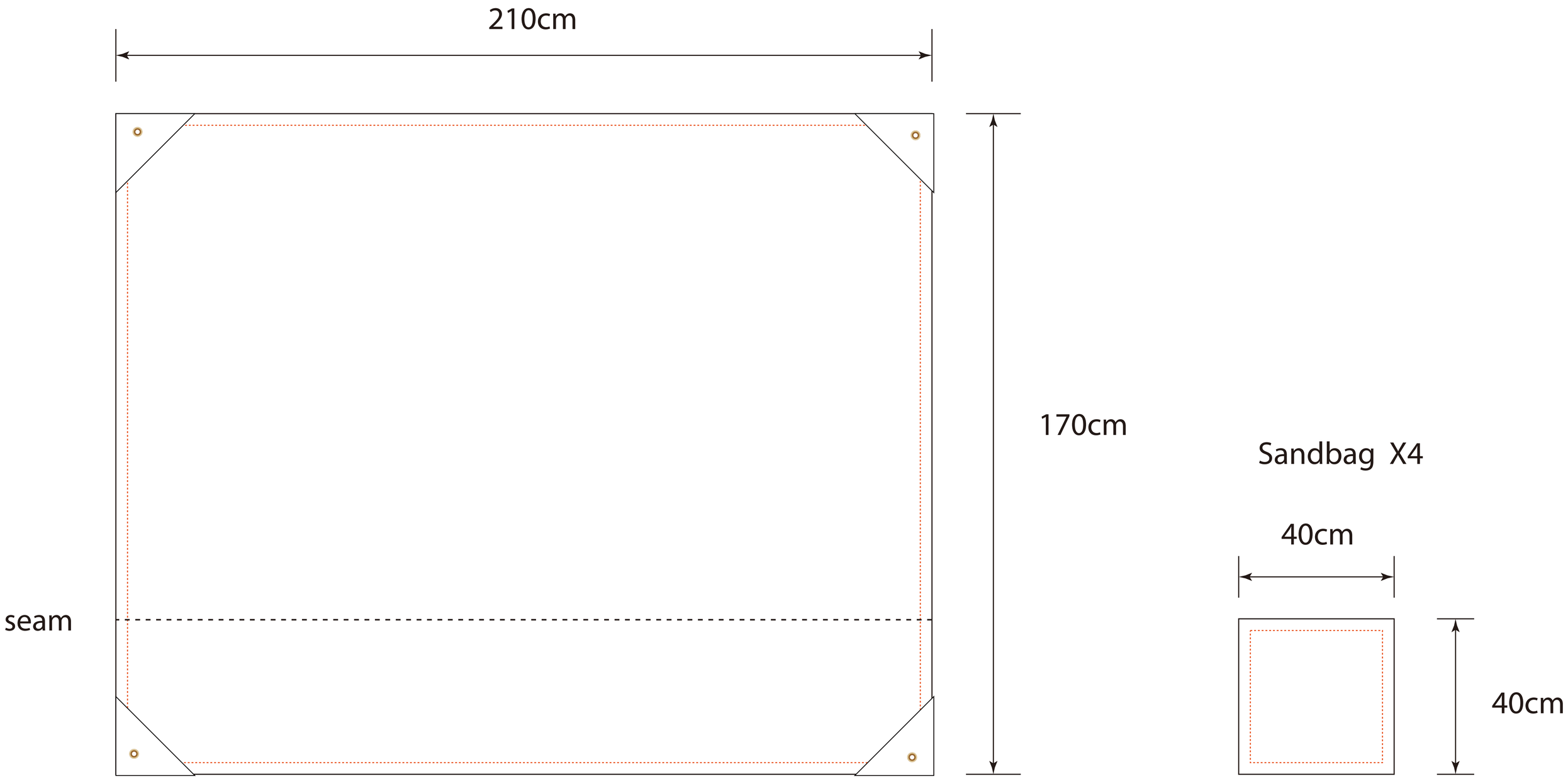
210cm
170cm
seam
Sandbag X4
40cm
40cm