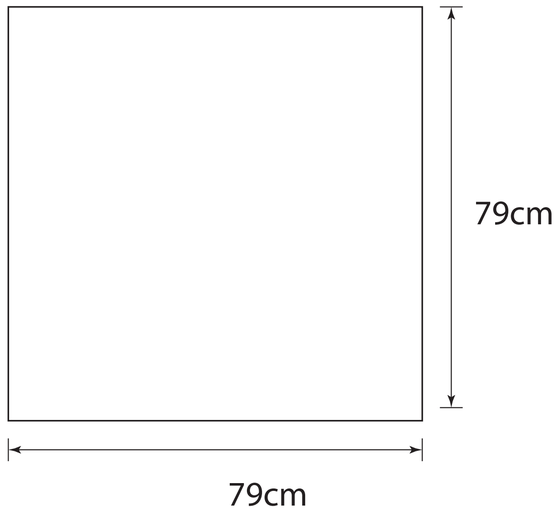
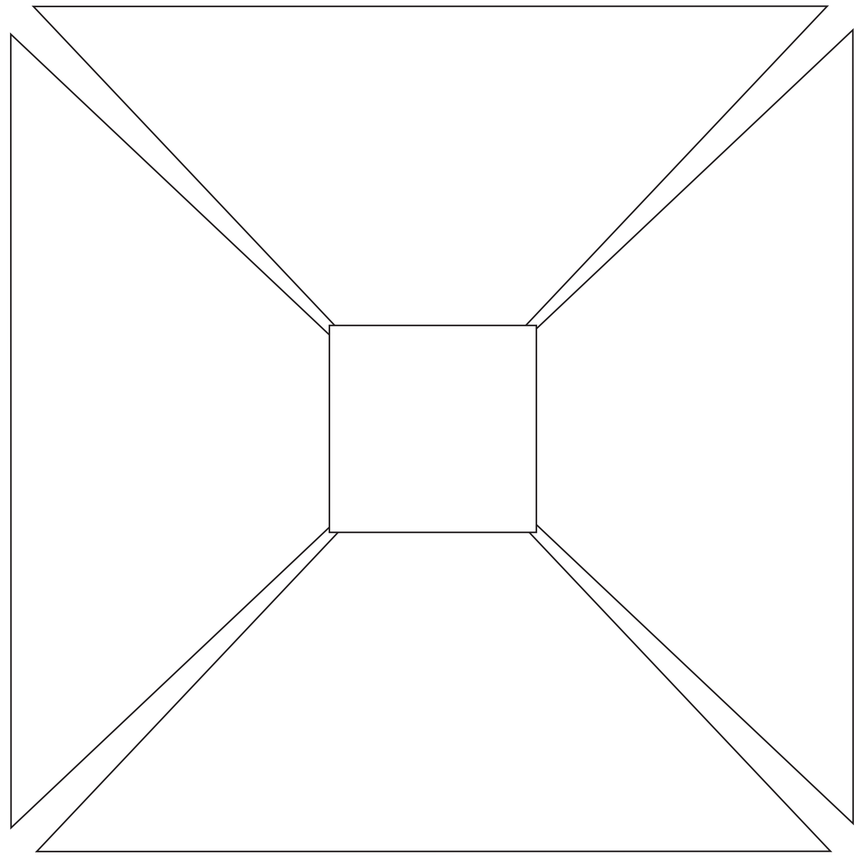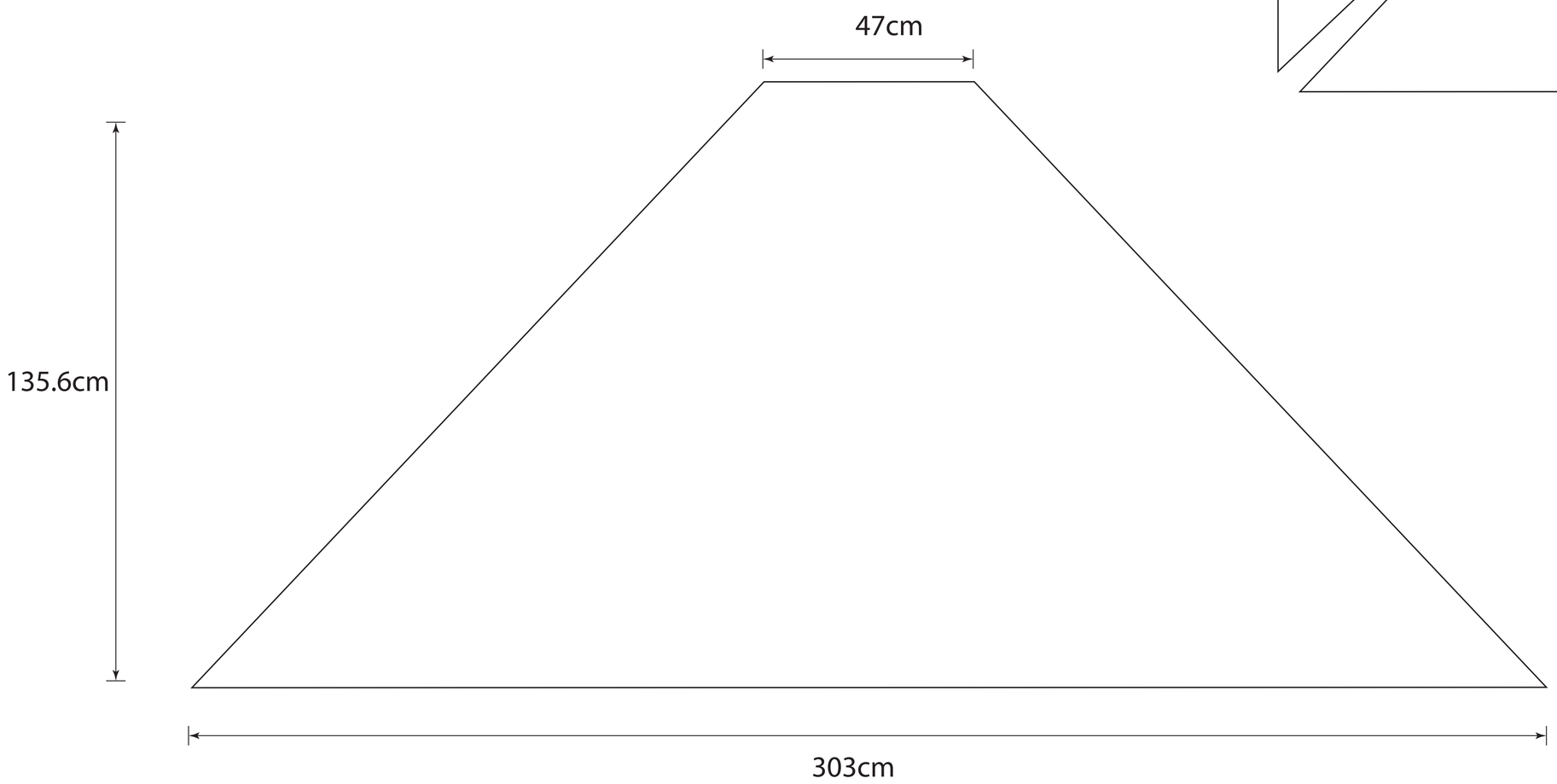
Corner pad x8