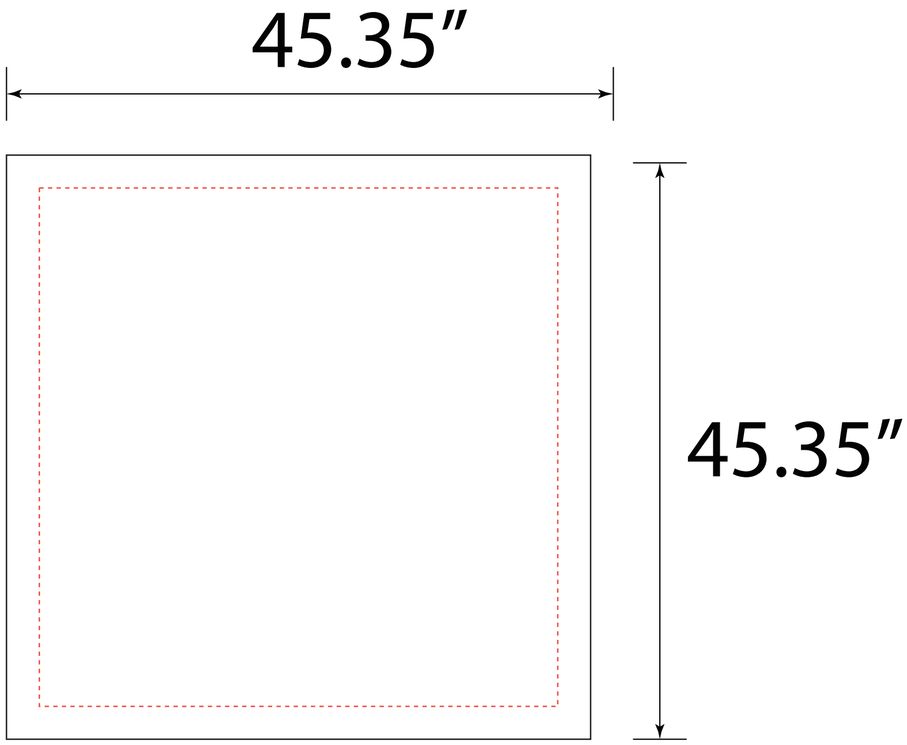
45.35″
45.35″

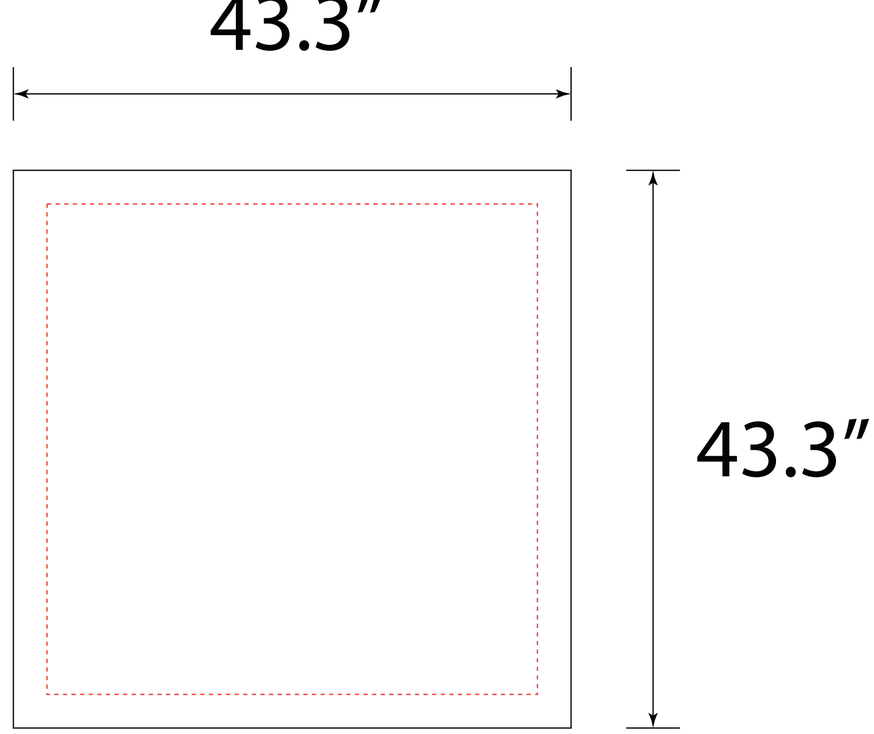
43.3″
43.3″

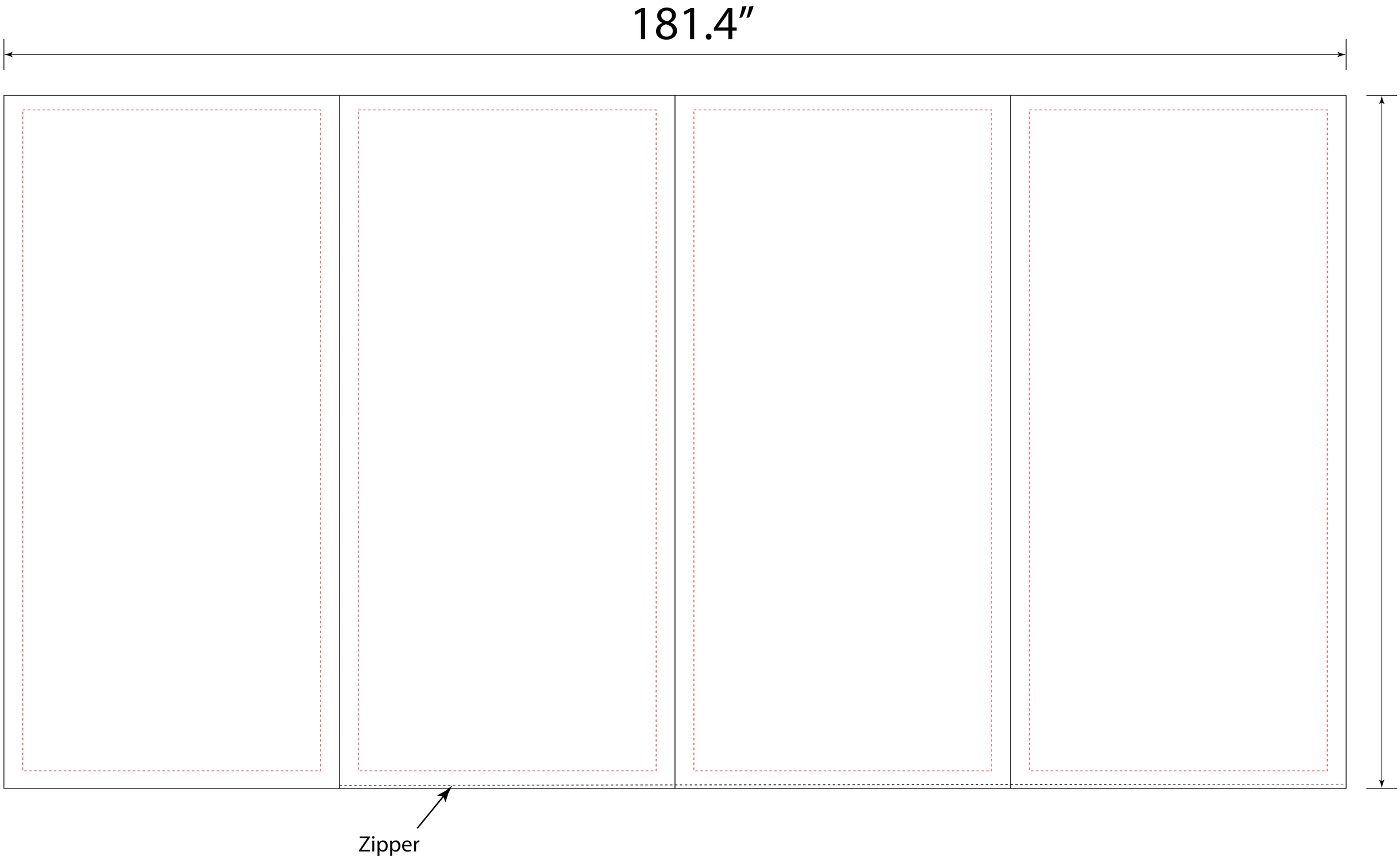
181.4″
Zipper