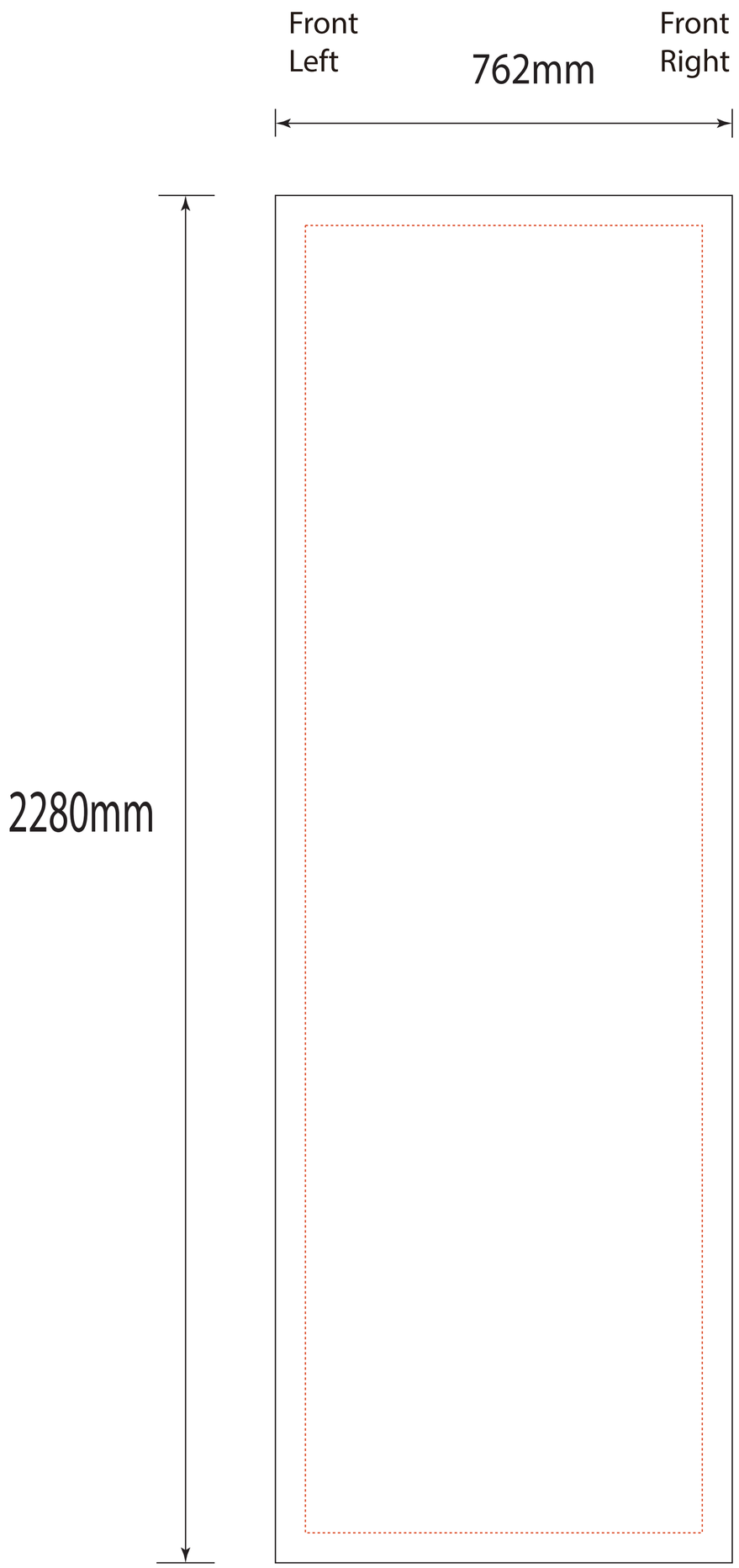
Front
Left
762mm
Front
Right
2280mm

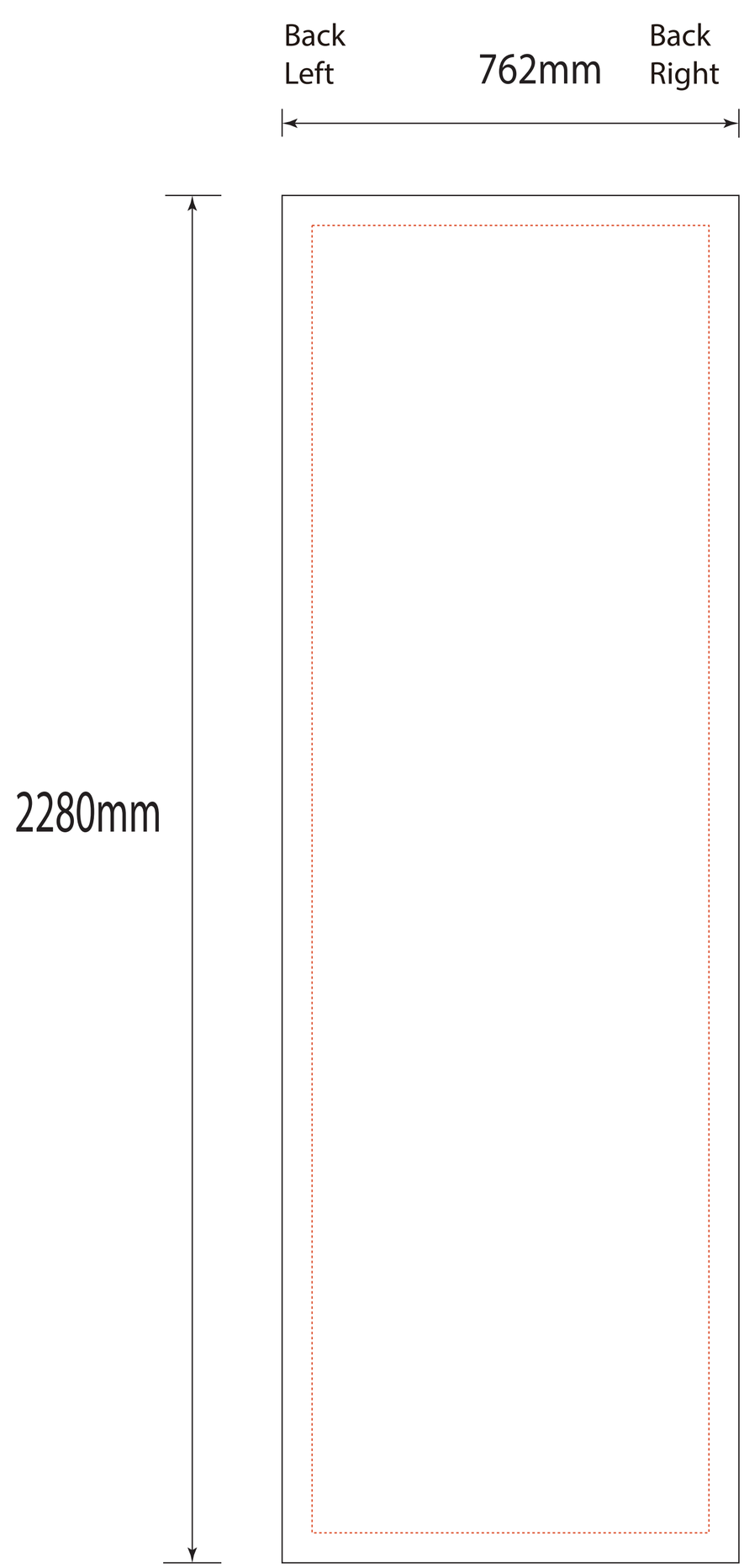
Back
Left
762mm
Back
Right
2280mm