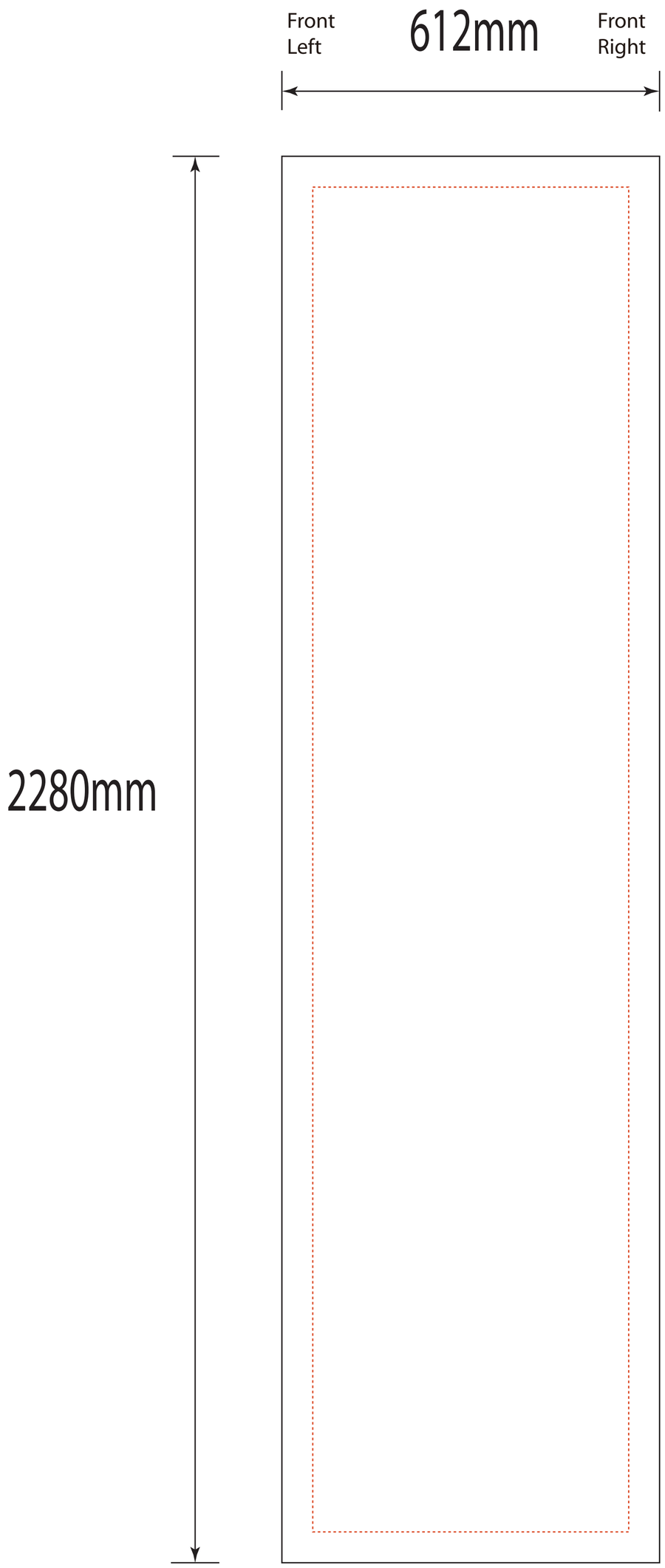
Front
Left
612mm
Front
Right
2280mm

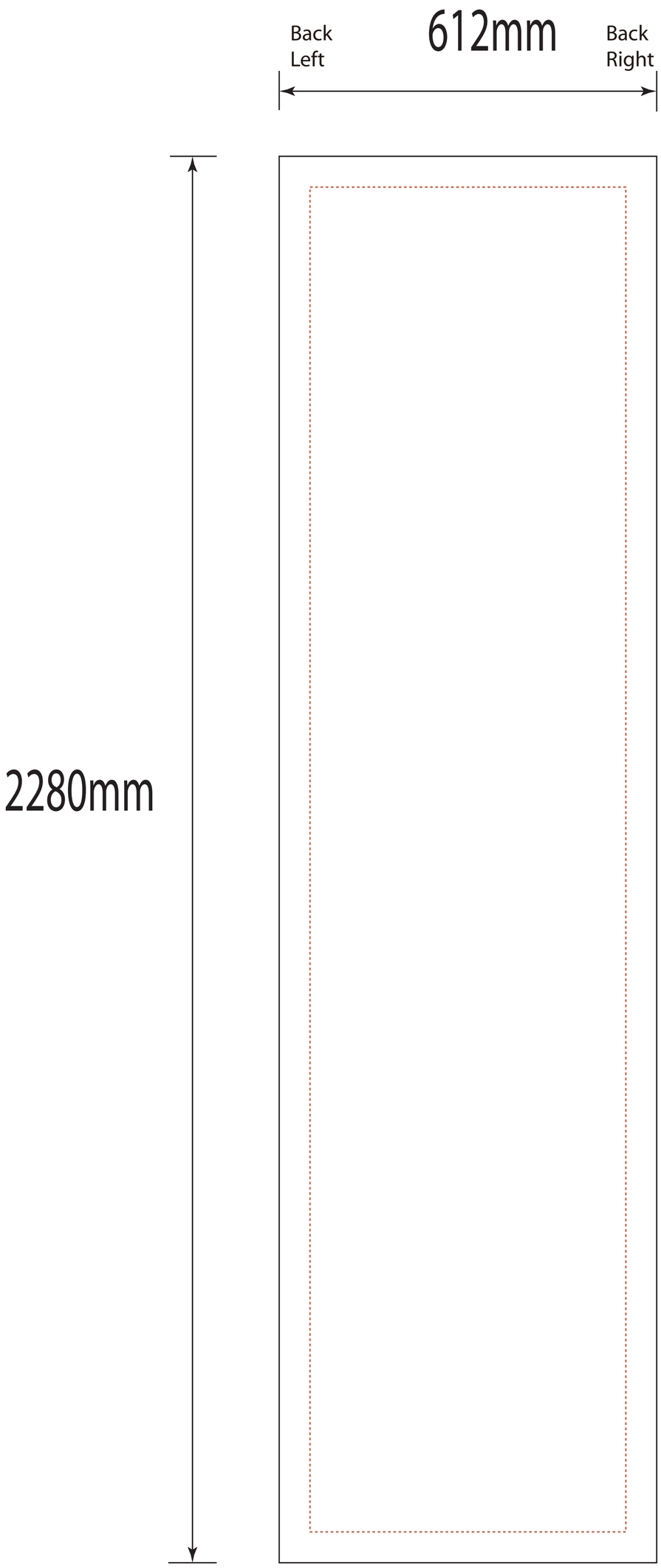
Back
Left
612mm
Back
Right
2280mm