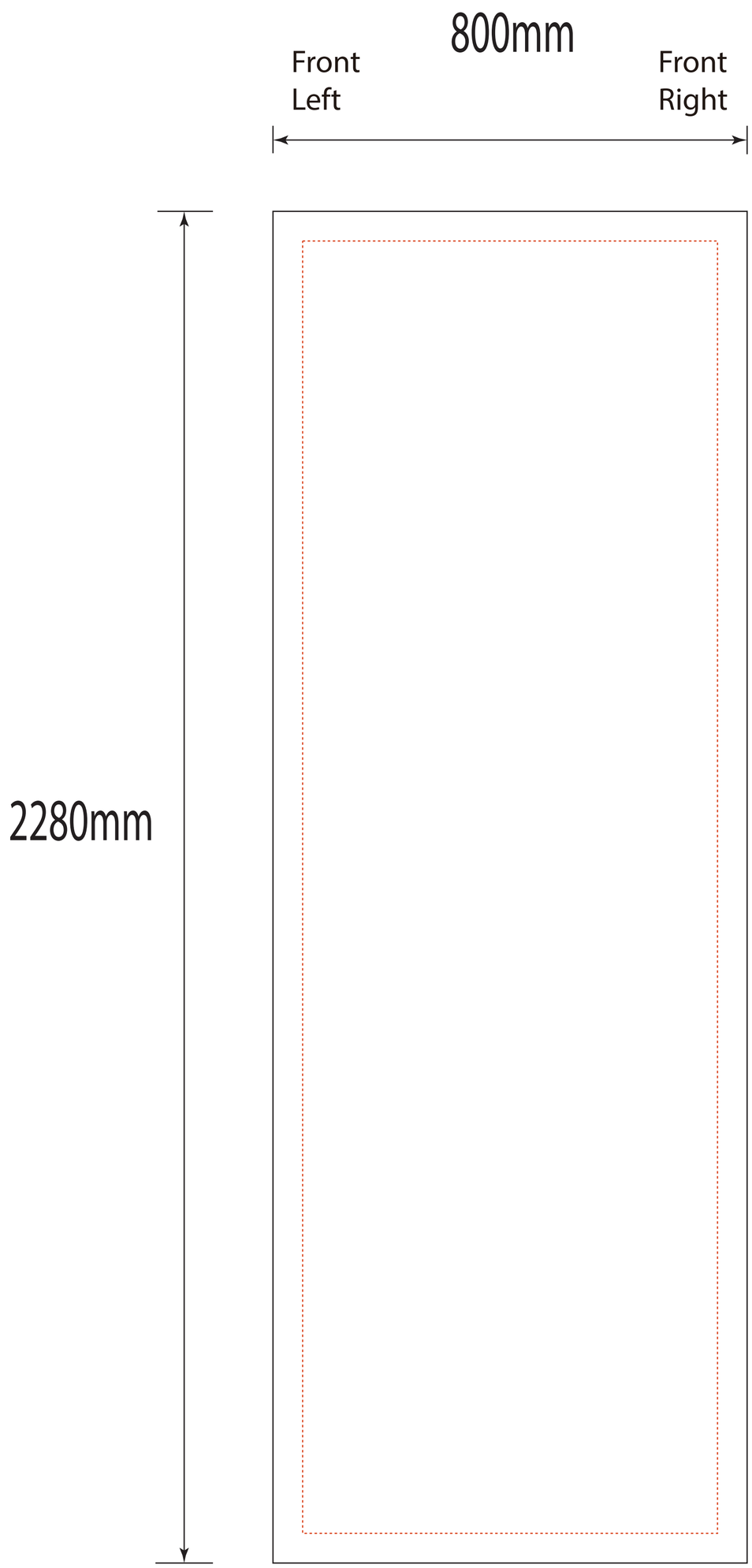
800mm
Front
Left
Front
Right
2280mm

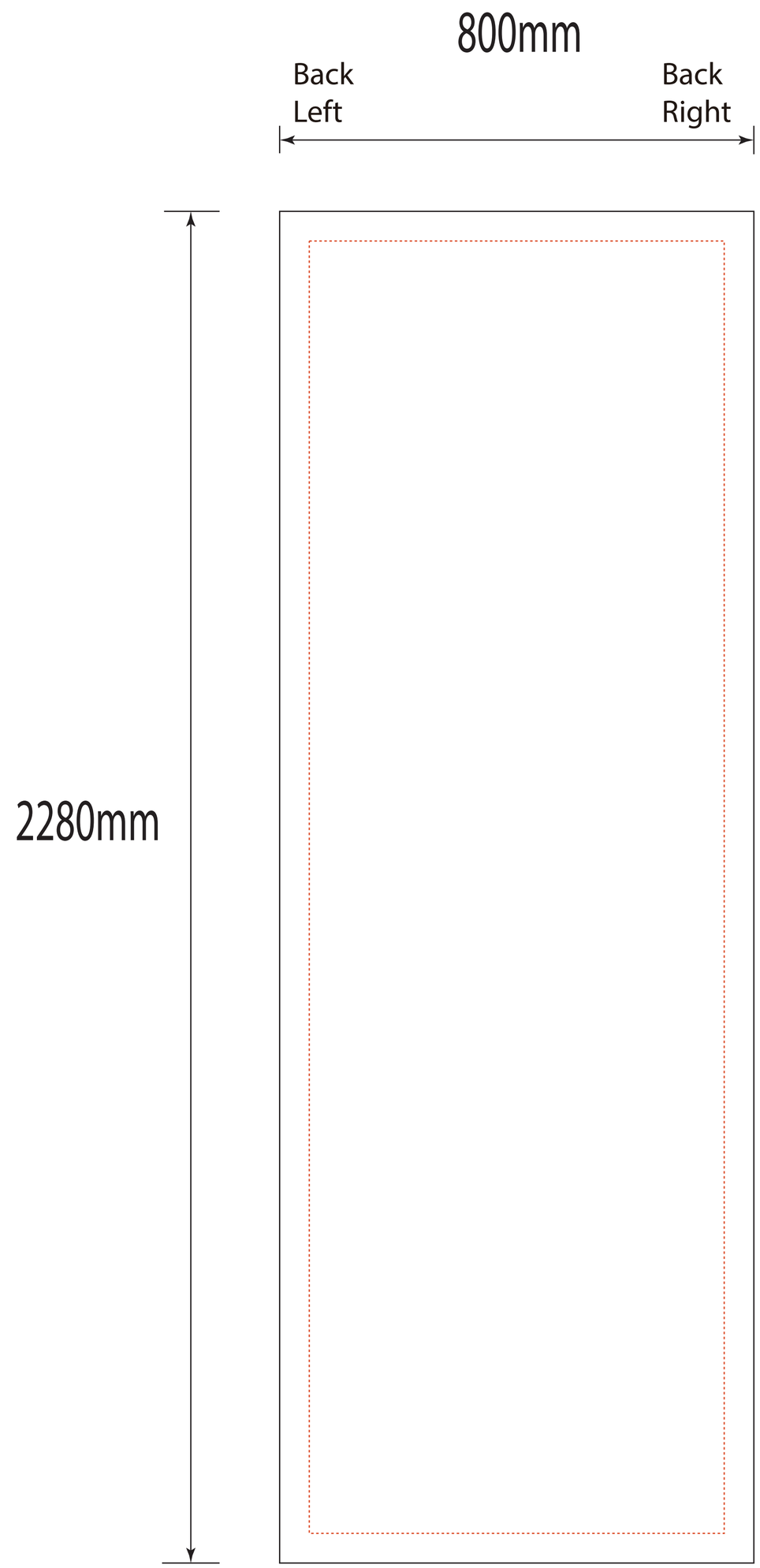
800mm
Back
Left
Back
Right
2280mm