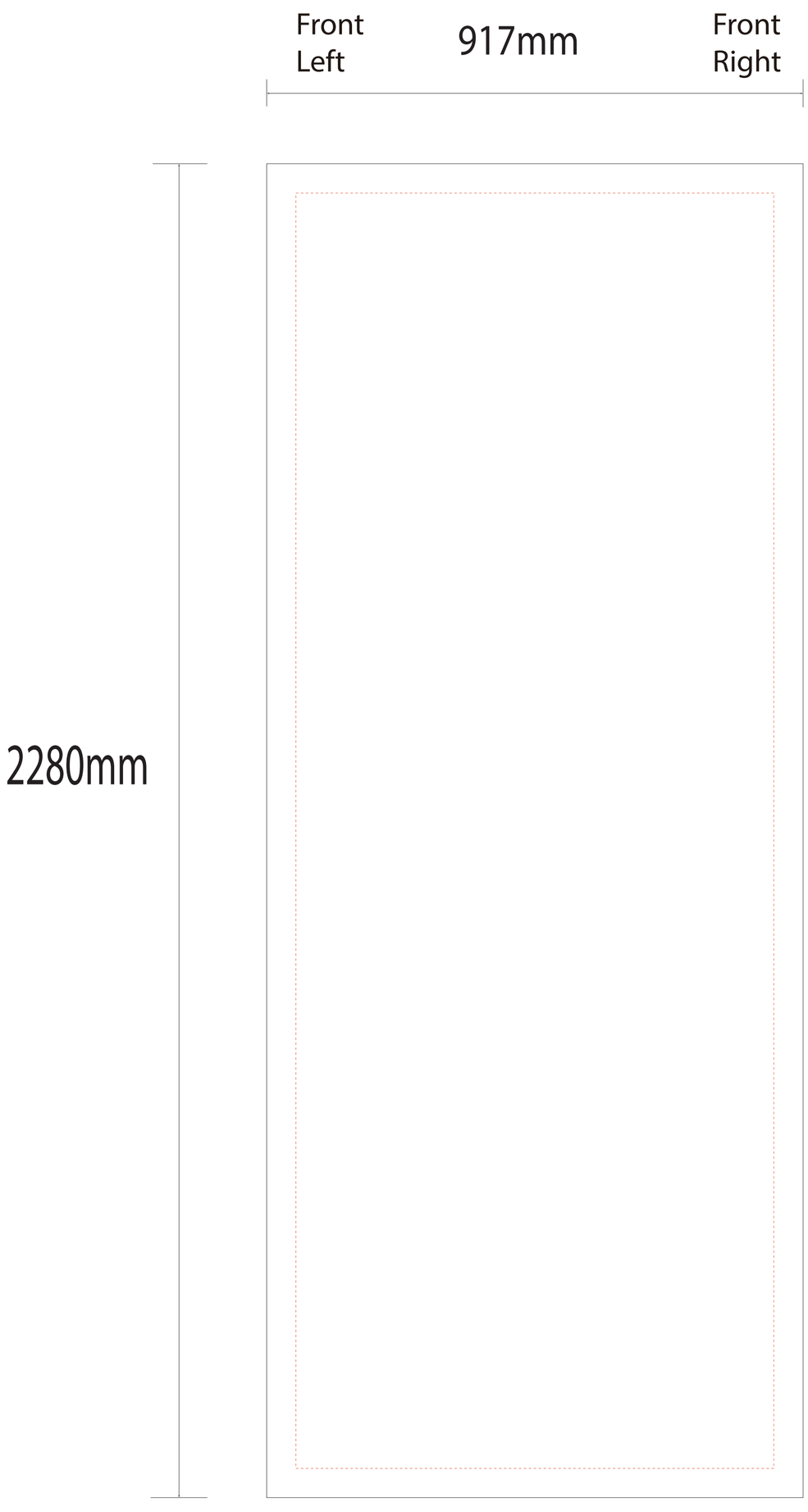
Front
Left
917mm
Front
Right
2280mm

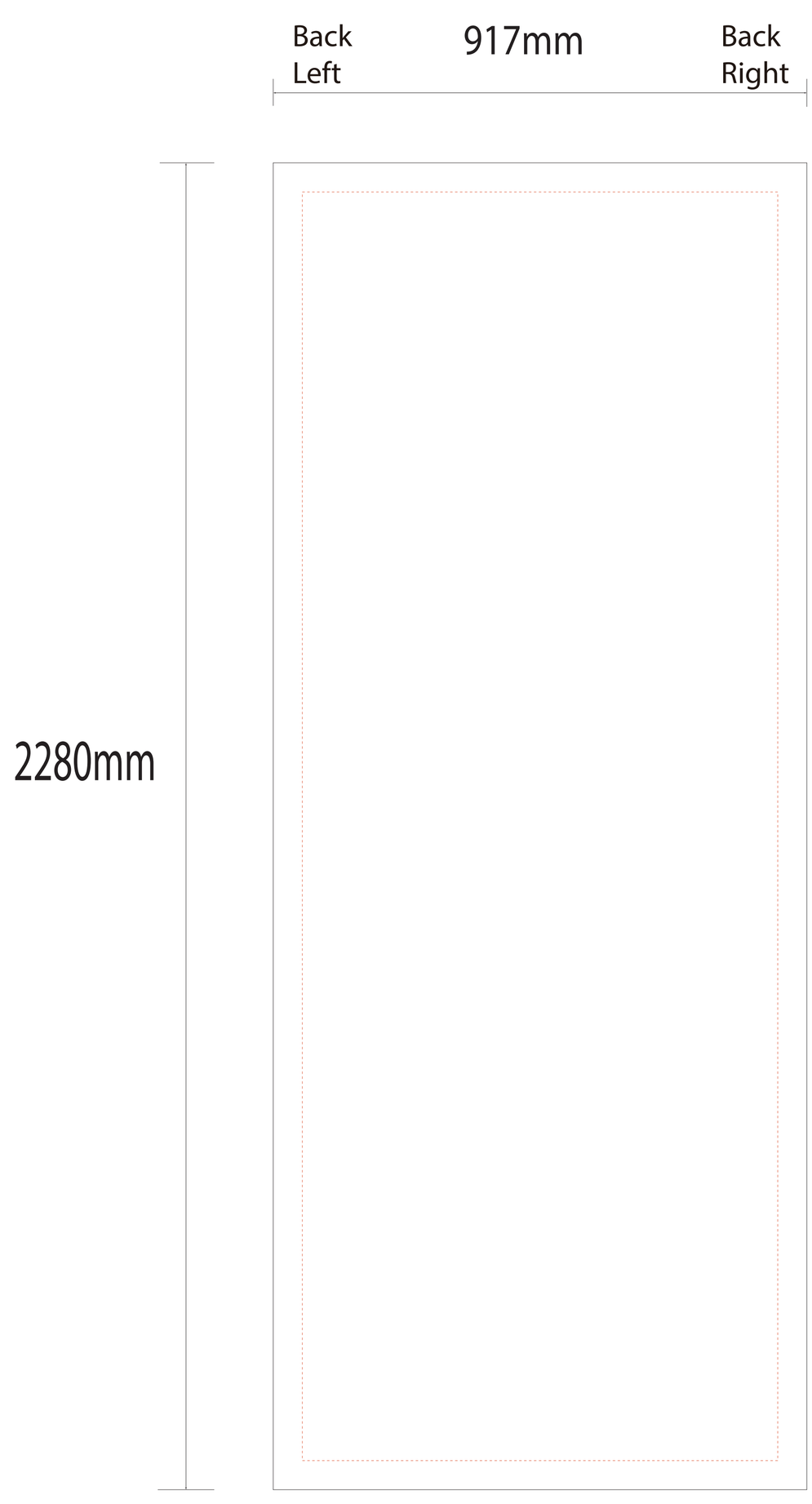
Back
Left
917mm
Back
Right
2280mm