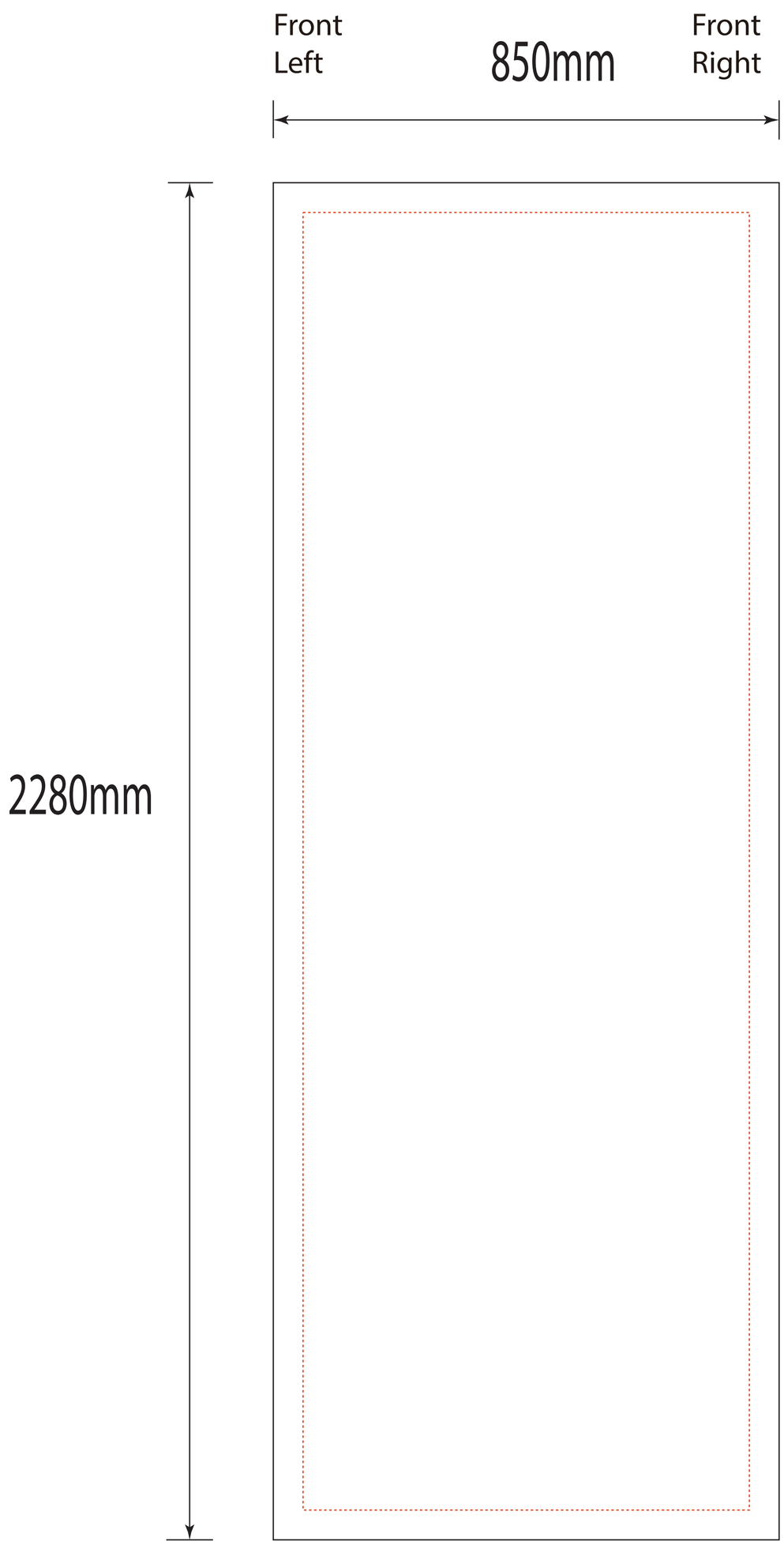
Front
Left
850mm
Front
Right
2280mm

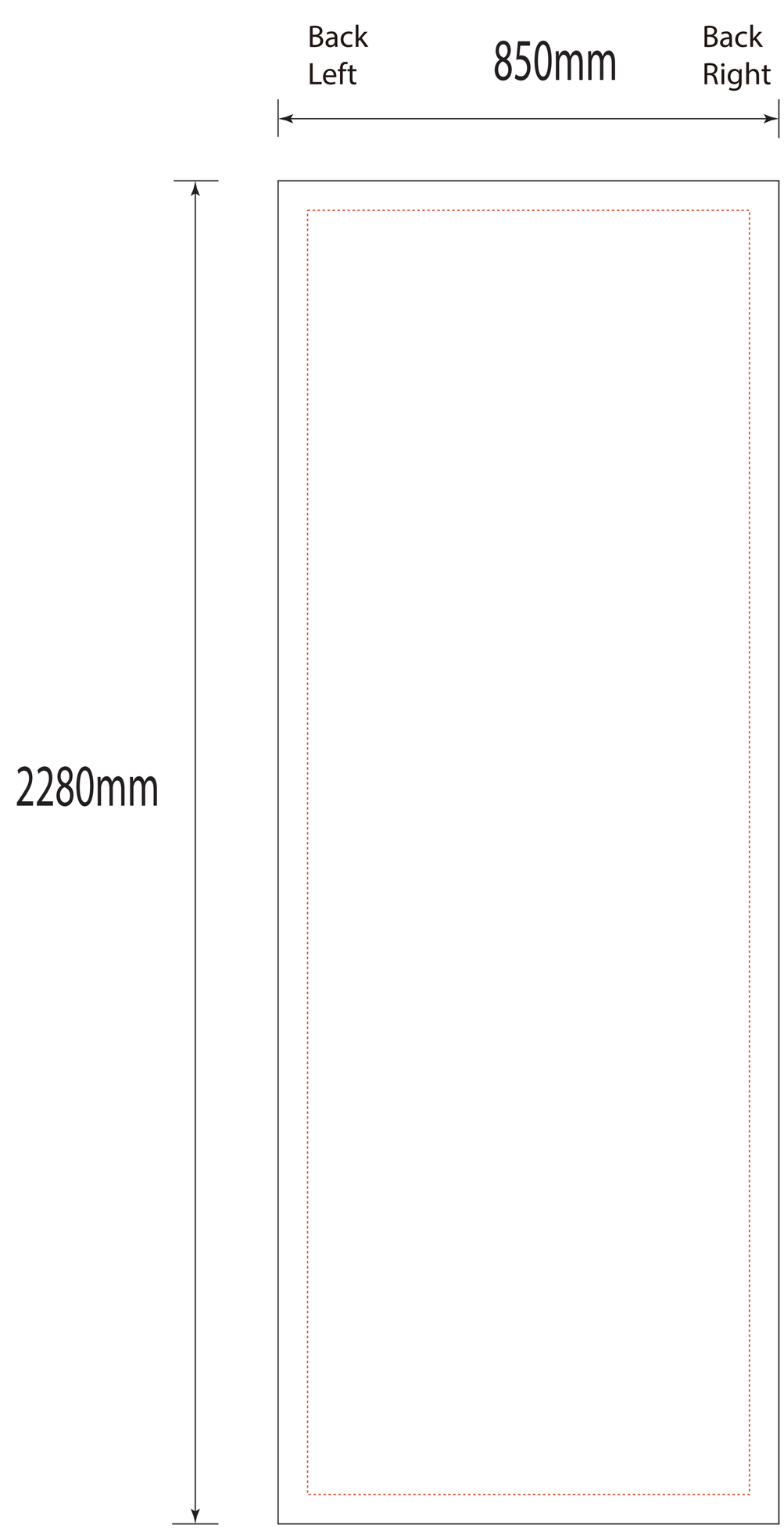
Back
Left
850mm
Back
Right
2280mm