Front

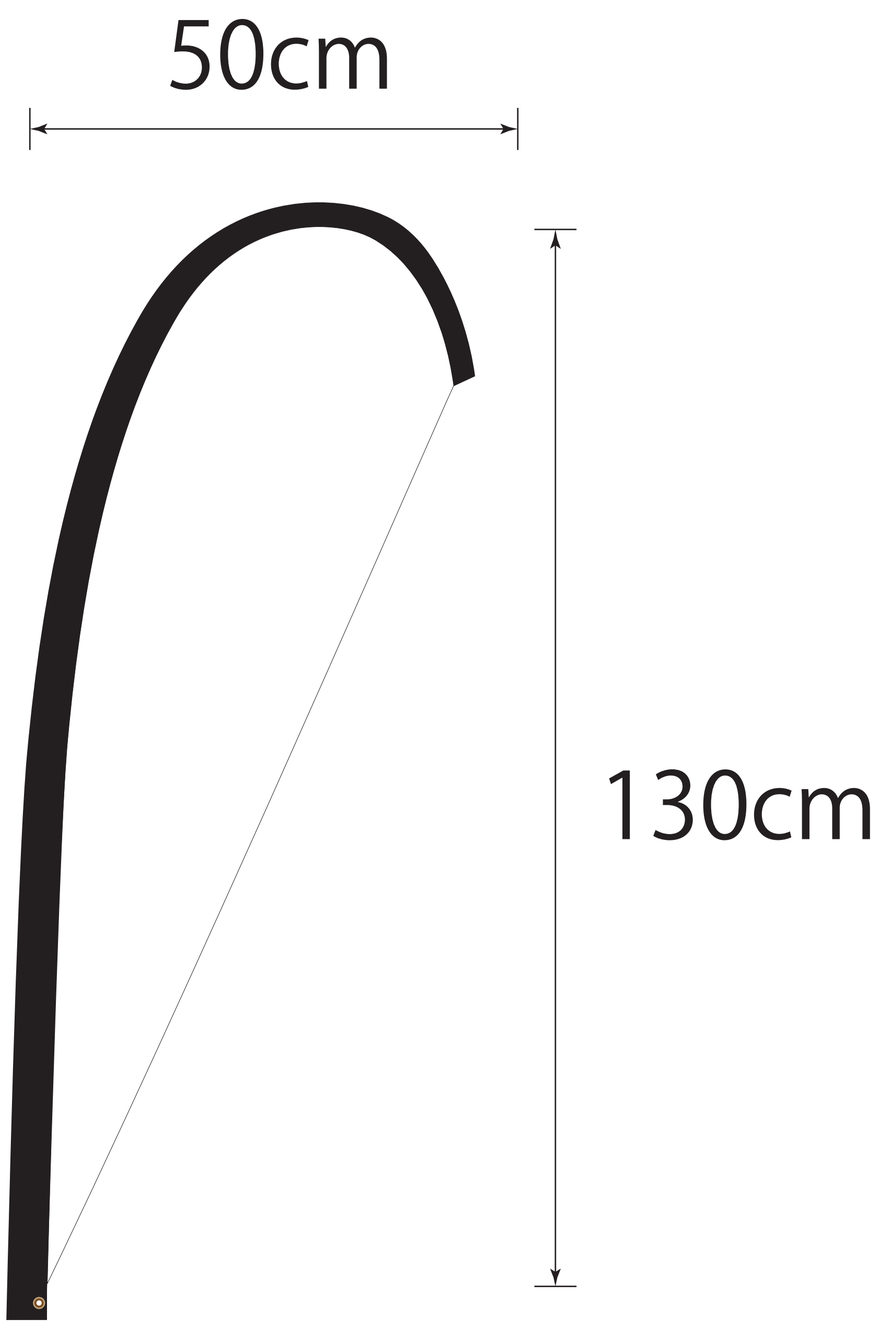
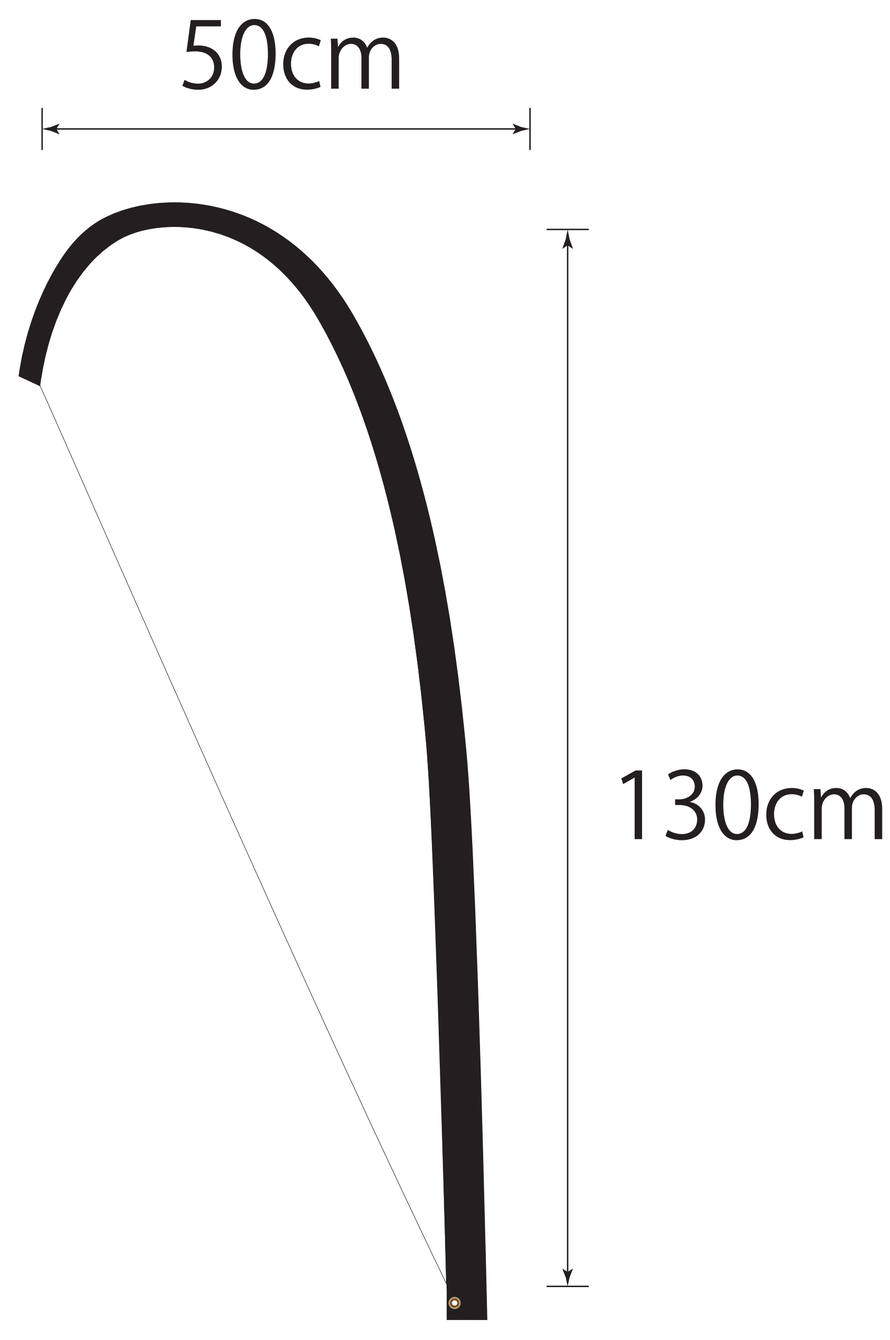
Back