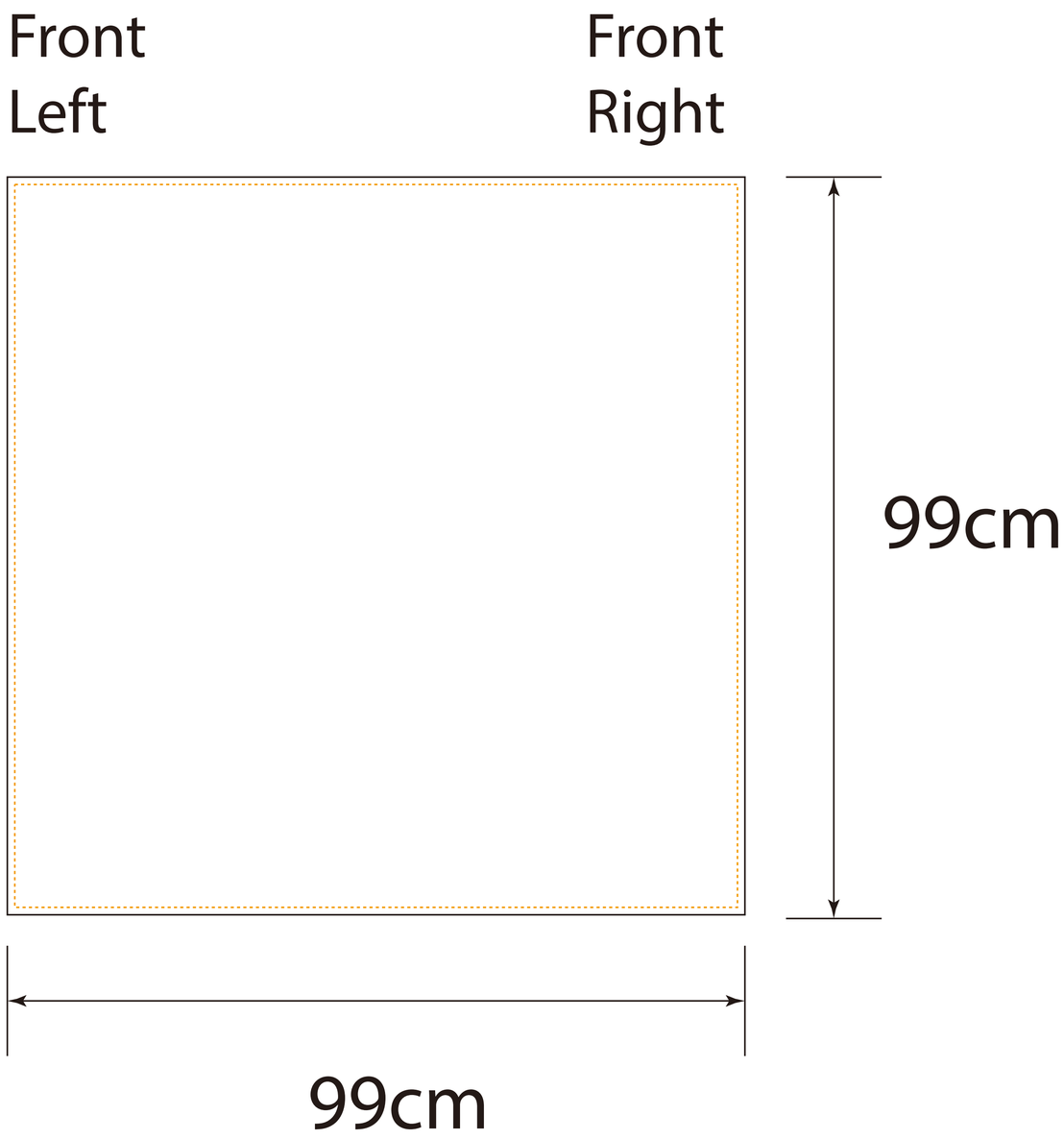
Front
Left
Front
Right
99cm
99cm

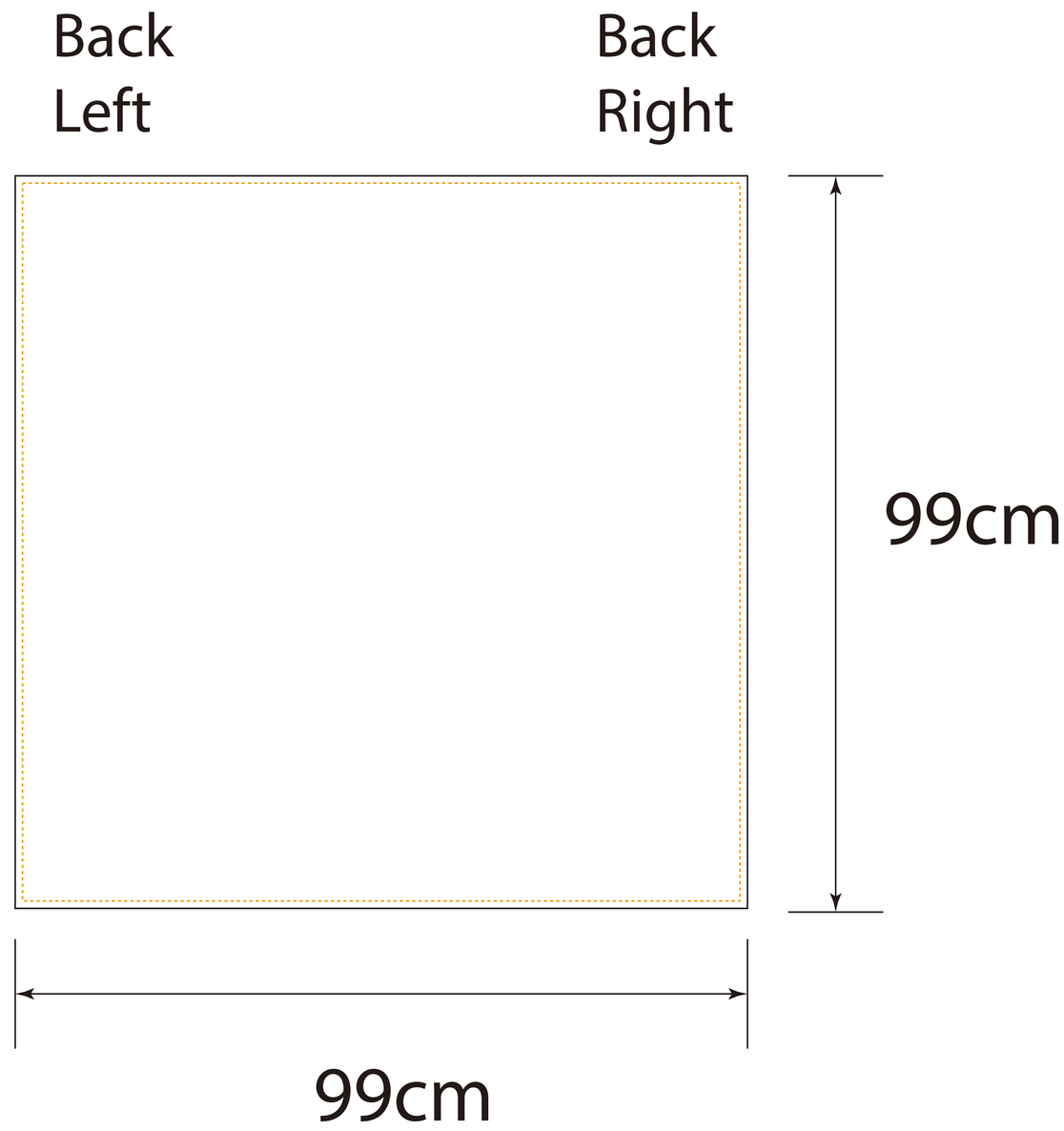
Back
Left
Back
Right
99cm
99cm