1:2

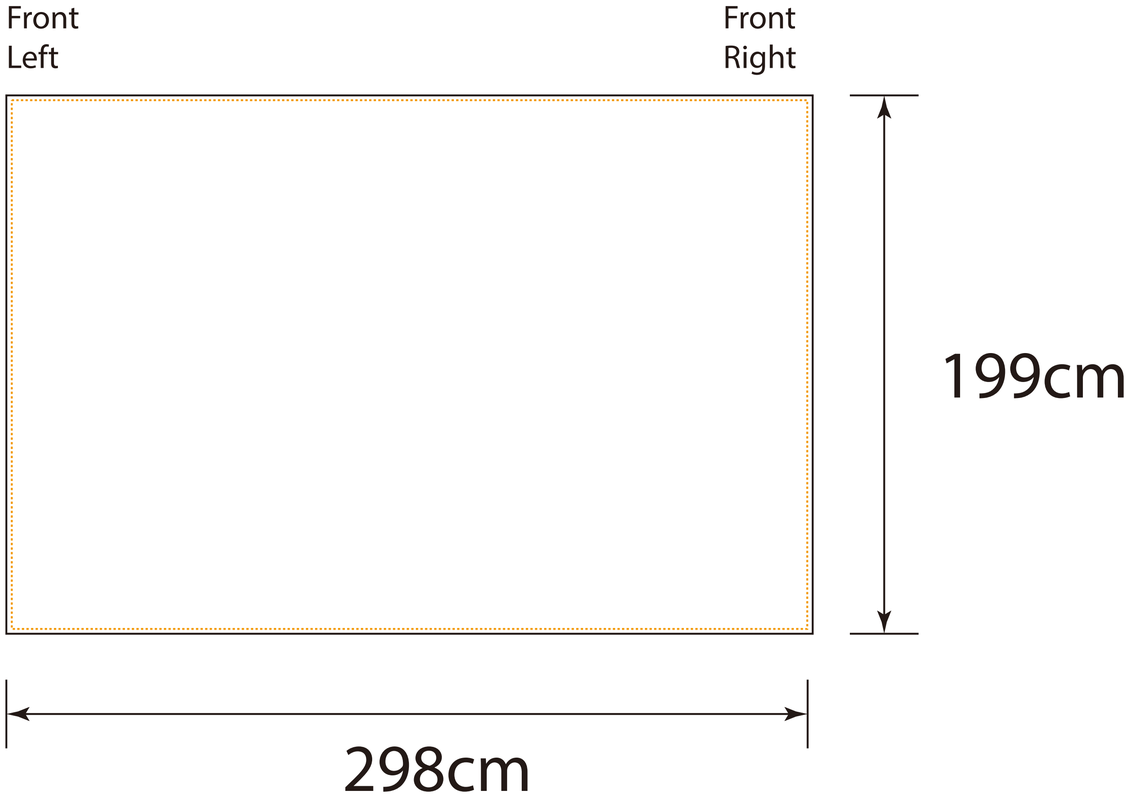
Front
Left
Front
Right
199cm
298cm

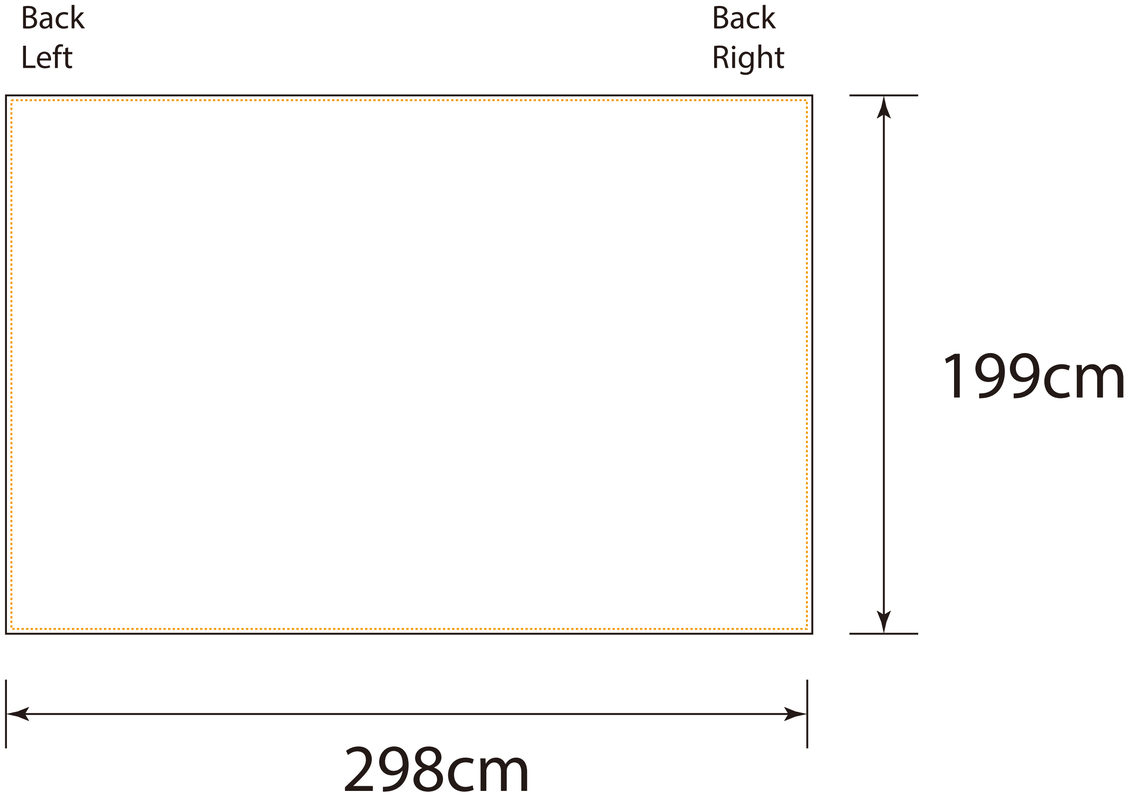
Back
Left
Back
Right
199cm
298cm