1:2

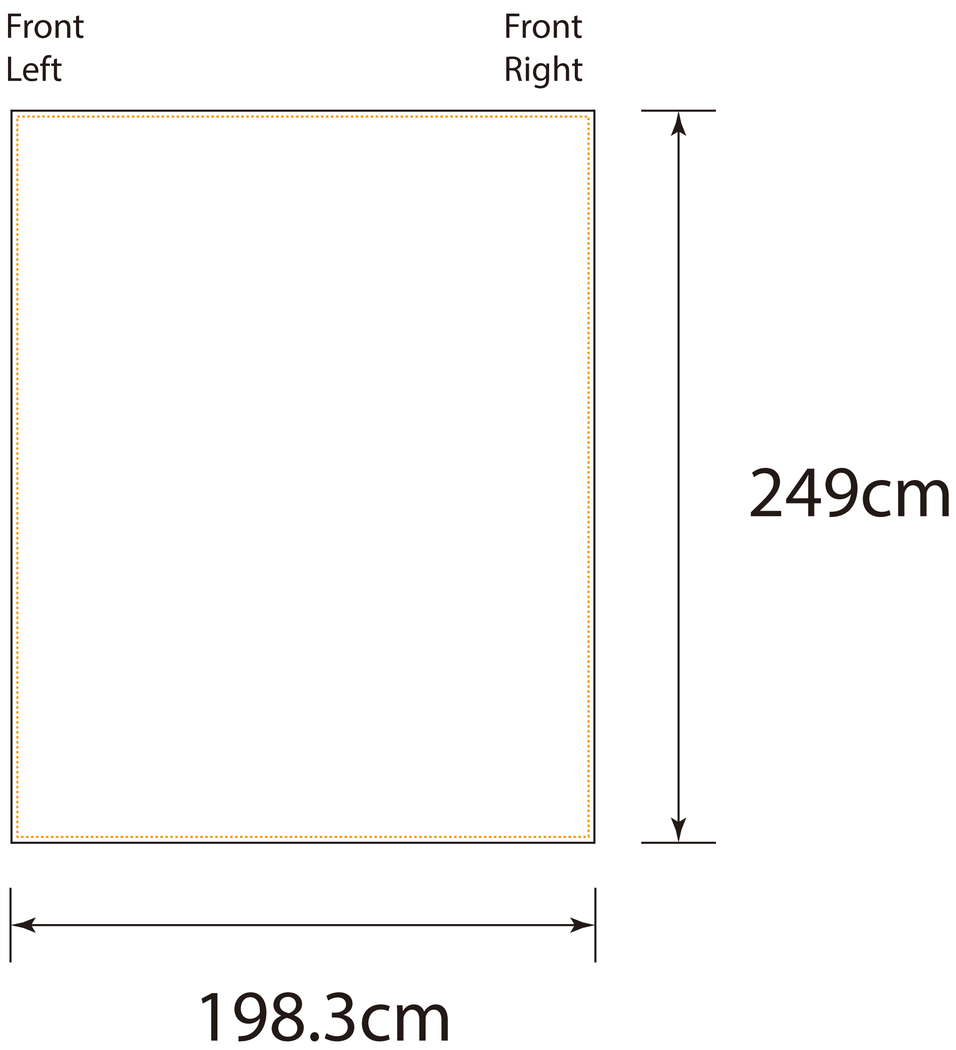
Front
Left
Front
Right
249cm
198.3cm

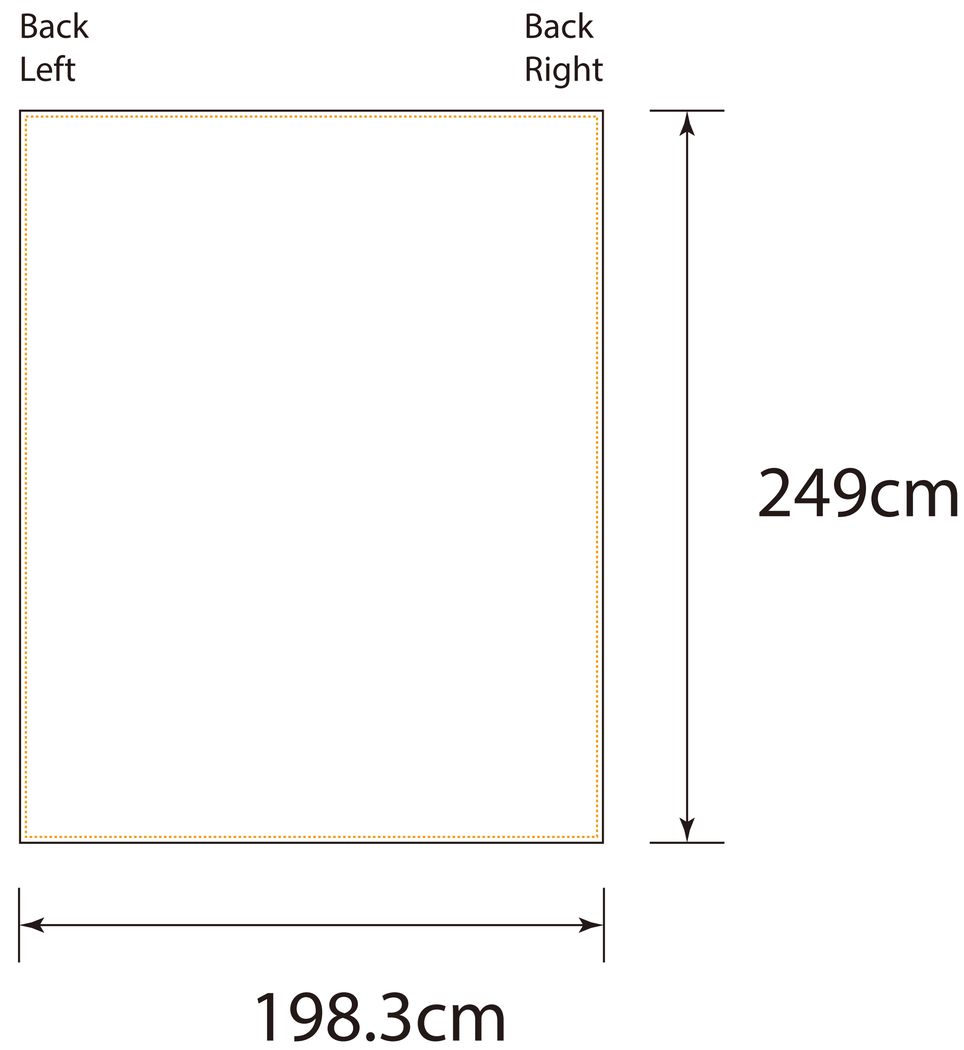
Back
Left
Back
Right
249cm
198.3cm