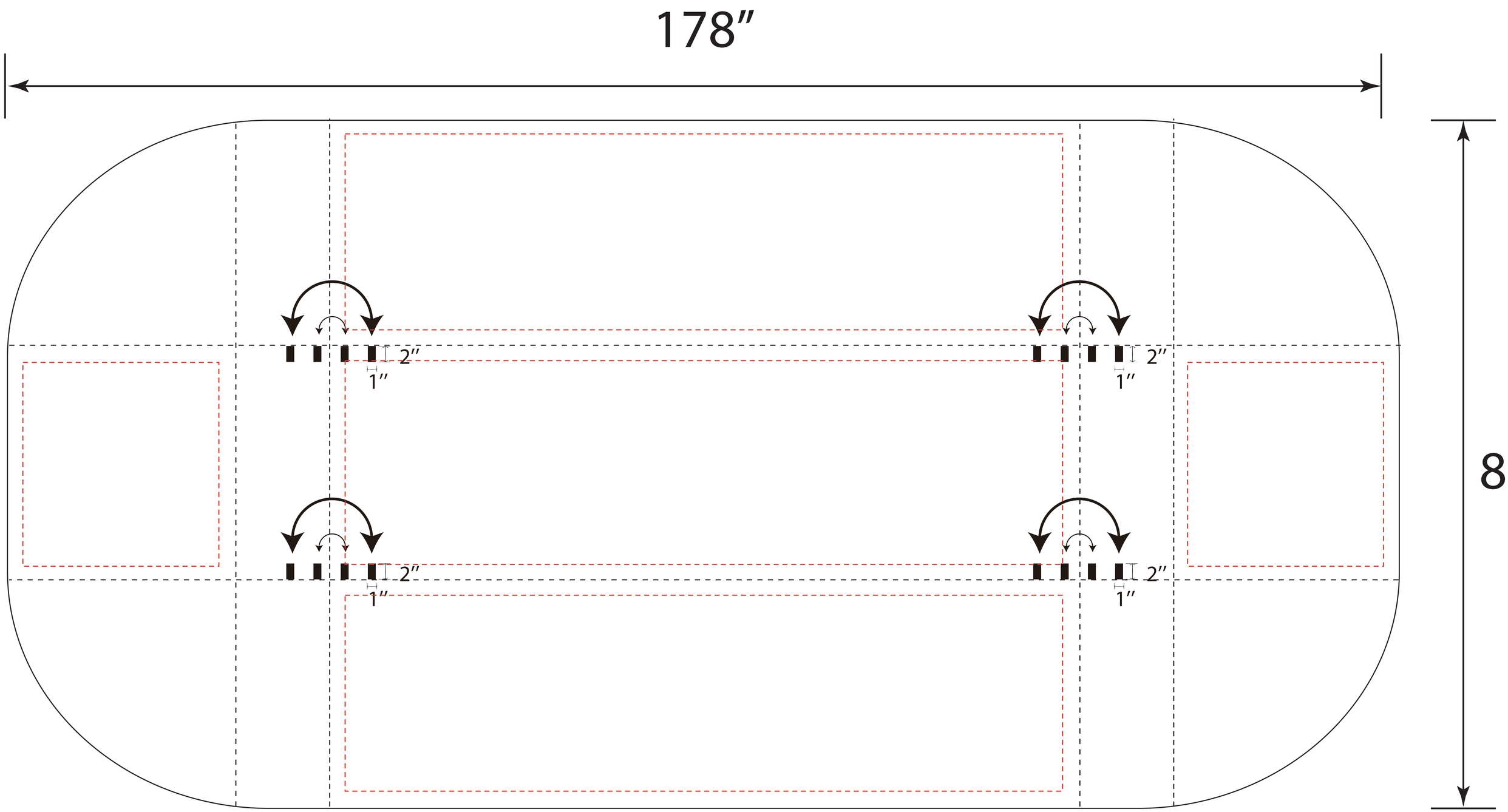10FT~8FT