5x5FT

Front

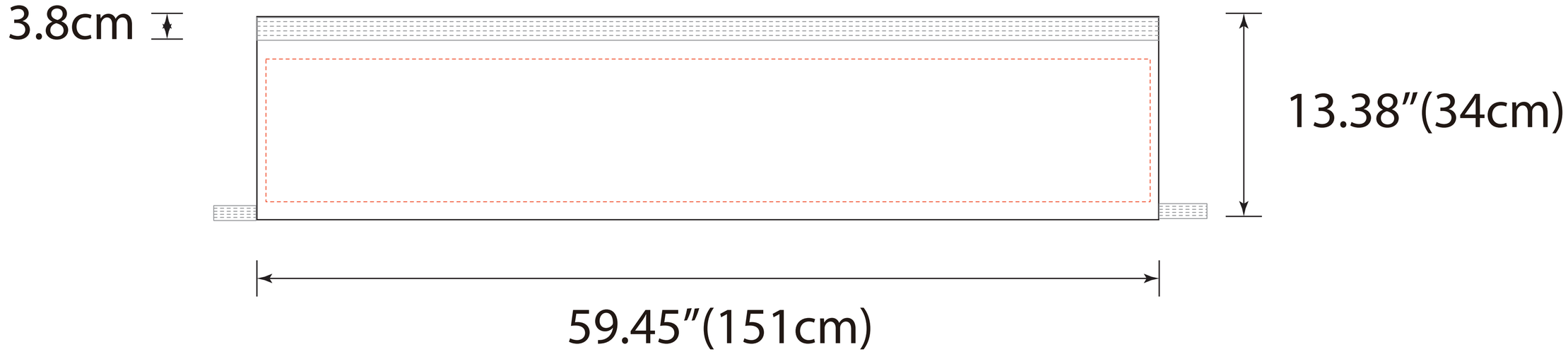
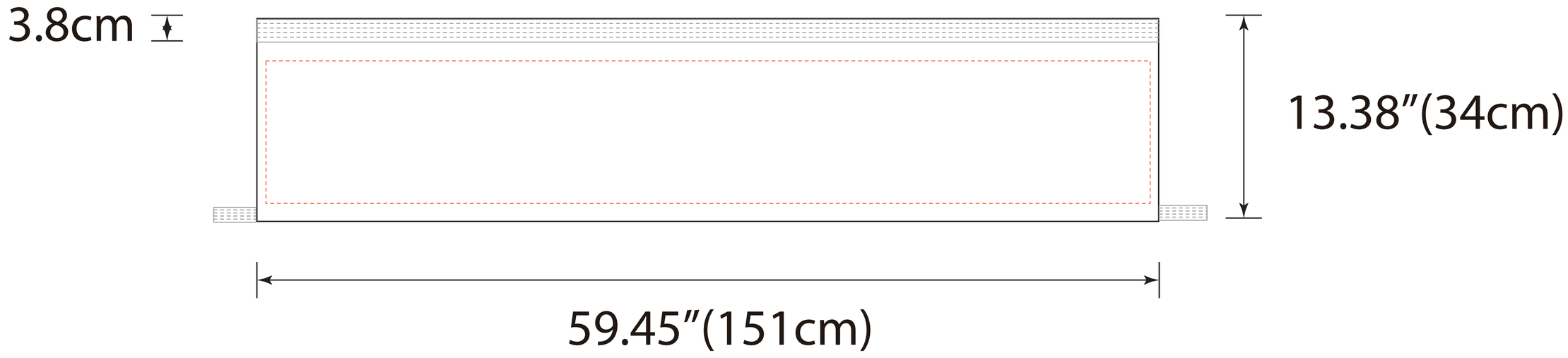
Back